100275648_2000534387_Rev AB

POWER-fin®

Installation & Operation Manual
Models: 2500 - 5000

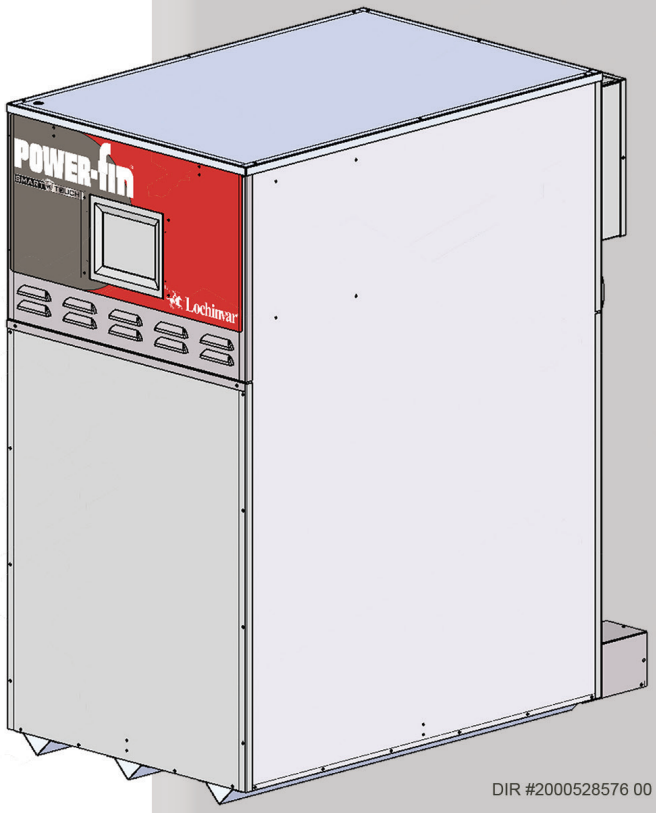

DIR #2000528576 00

DESIGN CERTIFIED®

CERTIFIED®

Lochinvar®
HIGH EFFICIENCY BOILERS & WATER HEATERS

⚠WARNING:

This manual supplies information for the installation, operation, and servicing of the appliance. It is strongly recommended that this manual and the Power-fin Service Manual be reviewed completely before proceeding with an installation. Perform steps in the order given. Failure to comply could result in severe personal injury, death, or substantial property damage.

Save this manual for future reference.

Contents

HAZARD DEFINITIONS 2
PLEASE READ BEFORE PROCEEDING 3
THE POWER-FIN -- HOW IT WORKS 4-5
RATINGS 6
1. DETERMINE BOILER LOCATION
Outdoor Boiler Installation 7
Clearances 8
Provide Air Openings to Room 8
Flooring and Foundation 9
Vent and Air Piping 9
Prevent Combustion Air Contamination 9
Using an Existing Vent System to Install a New Boiler 9
Corrosive Contaminants and Sources 10
Removing a Boiler from Existing Common Vent 10
Remove Boiler from Wood Pallet 11
Combustion and Ventilation Air Requirements 11-13
Combustion Air Filter 13
2. GENERAL VENTING
Venting Options 14
Install Vent and Combustion Air Piping 15
Air Inlet Pipe Materials 15
Vent and Air Piping 16
Air Intake / Vent Connections 16
Min./Max. Combustion Air & Vent Piping Lengths ..... 17 - 18
Vent and Air Piping 19
Common Venting CAT II 19
Outdoor Venting 20
3. VERTICAL DIRECT VENTING
Vent/Air Termination - Vertical 21
Determine Location 21
Prepare Roof Penetrations 21
Termination and Fittings 21-22
Multiple Vent/Air Terminations 22
4. SIDEWALL DIRECT VENTING
Vent/Air Termination - Sidewall 23-25
Determine Location 23-25
Prepare Wall Penetrations 24
Termination and Fittings 24
Multiple Vent/Air Terminations 24-25
Room Air 25
5. WATER CONNECTIONS
Inlet and Outlet Connections 26
Heat Exchanger 26
Minimum Water Temperatures 26
Water Flow Switch 27
Low Water Cutoff 27
Relief Valve 27
Heating Boiler Installations 27-35
6. GAS CONNECTIONS
Connecting Gas Supply Piping 36
Natural Gas 36
Pipe Sizing for Natural Gas 36
Natural Gas Supply Pressure Requirements 36
Propane Gas 37
Pipe Sizing for Propane Gas 37
Propane Supply Pressure Requirements 37
Check Inlet Gas Supply 37
Gas Pressure 38
Gas Valve Replacement 38
7. FIELD WIRING
Boiler Operating Control Module 39
Line Voltage Connections 40
Low Voltage Connections 41
Wiring of the Cascade 42
8. CONDENSATE DISPOSAL
Condensate Trap Installation 44
9. START-UP 45-50
10. OPERATING INFORMATION
Set Hot Water Generator (HW) Operation 51
Configuration of the Cascade 52
General 53-55
Cascade 56
Sequence of Operation 57
Home Screen 58
11. MAINTENANCE
Maintenance & Annual Start-up 59-64
12. DIAGRAMS
Wiring Diagrams 65-67
Ladder Diagrams 68-70
Revision Notes ..... Back Cover

Hazard definitions

The following defined terms are used throughout this manual to bring attention to the presence of hazards of various risk levels or to important information concerning the life of the product.

⚠ DANGER DANGER indicates an imminently hazardous situation which, if not avoided, will result in death or serious injury.

⚠ WARNING WARNING indicates a potentially hazardous situation which, if not avoided, could result in death or serious injury.

⚠ CAUTION CAUTION indicates a potentially hazardous situation which, if not avoided, may result in minor or moderate injury.

CAUTION CAUTION used without the safety alert symbol indicates a potentially hazardous situation which, if not avoided, may result in property damage.

NOTICE NOTICE indicates special instructions on installation, operation, or maintenance that are important but not related to personal injury or property damage.

Please read before proceeding

⚠WARNING **Installer** – Read all instructions, including this manual and the Power-fin Service Manual, before installing. Perform steps in the order given.

User – This manual is for use only by a qualified heating installer/service technician. Refer to the User's Information Manual for your reference.

Have this boiler serviced/inspected by a qualified service technician, at least annually.

Failure to comply with the above could result in severe personal injury, death or substantial property damage.

NOTICE When calling or writing about the boiler – Please have the boiler model and serial number from the boiler rating plate.

Consider piping and installation when determining boiler location.

Any claims for damage or shortage in shipment must be filed immediately against the transportation company by the consignee.

Factory warranty (shipped with unit) does not apply to units improperly installed or improperly operated.

⚠WARNING Failure to adhere to the guidelines on this page can result in severe personal injury, death, or substantial property damage.

⚠WARNING If the information in this manual is not followed exactly, a fire or explosion may result causing property damage, personal injury or loss of life.

This appliance MUST NOT be installed in any location where gasoline or flammable vapors are likely to be present.

WHAT TO DO IF YOU SMELL GAS

- Do not try to light any appliance.
- Do not touch any electric switch; do not use any phone in your building.
- Immediately call your gas supplier from a near by phone. Follow the gas supplier's instructions.
- If you cannot reach your gas supplier, call the fire department.
- Installation and service must be performed by a qualified installer, service agency, or the gas supplier.

⚠WARNING DO NOT install units in rooms or environments that contain corrosive contaminants (see Table 1A). Failure to comply could result in severe personal injury, death, or substantial property damage.

⚠WARNING The California Safe Drinking Water and Toxic Enforcement Act requires the Governor of California to publish a list of substances known to the State of California to cause cancer, birth defects, or other reproductive harm, and requires businesses to warn of potential exposure to such substances.

This product contains a chemical known to the State of California to cause cancer, birth defects, or other reproductive harm. This boiler can cause low level exposure to some of the substances listed in the Act.

When servicing boiler –

- To avoid electric shock, disconnect electrical supply before performing maintenance.
- To avoid severe burns, allow boiler to cool before performing maintenance.

Boiler operation –

- Do not block flow of combustion or ventilation air to the boiler.
- Should overheating occur or gas supply fail to shut off, do not turn off or disconnect electrical supply to circulator. Instead, shut off the gas supply at a location external to the appliance.
- Do not use this boiler if any part has been under water. The possible damage to a flooded appliance can be extensive and present numerous safety hazards. Any appliance that has been under water must be replaced.
- The installer must verify that at least one carbon monoxide alarm has been installed within a residential living space or home following the alarm manufacturer's instructions and applicable local codes before putting the appliance into operation.

Boiler water –

- Thoroughly flush the system to remove debris. Use an approved pre-commissioning cleaner (see Start-Up Section), without the boiler connected, to clean the system and remove sediment. The high efficiency heat exchanger can be damaged by build-up or corrosion due to sediment.
  NOTE: Cleaners are designed for either new systems or pre-existing systems. Choose accordingly.
- Do not use petroleum-based cleaning or sealing compounds in the boiler system. Gaskets and seals in the system may be damaged. This can result in substantial property damage.
- Do not use "homemade cures" or "boiler patent medicines". Serious damage to the boiler, personnel, and/or property may result.
- Continual fresh make-up water will reduce boiler life. Mineral build-up in the heat exchanger reduces heat transfer, overheats the heat exchanger, and causes failure. Addition of oxygen carried in by makeup water can cause internal corrosion in system components. Leaks in boiler or piping must be repaired at once to prevent the need for makeup water.

Freeze protection fluids –

- NEVER use automotive antifreeze. Use only inhibited propylene glycol solutions, which are specifically formulated for hydronic systems. Ethylene glycol is toxic and can attack gaskets and seals used in hydronic systems.

The Power-fin - How it works...

1. **Heat exchanger**
The heat exchanger allows system water to flow through specially designed tubes for maximum heat transfer. The headers and copper finned tubing are encased in a jacket that contains the combustion process.

2. **Heat exchanger access cover (not shown)**
The heat exchanger access cover is a stainless steel door which allows access for service, maintenance, and removal of the heat exchanger from inside the combustion chamber.

3. **Blower**
The blower pulls in air and gas through the venturi / whirlwind (see item 5) and injects the fuel/air mixture into the burner, where they burn inside the combustion chamber.

4. **Gas valve**
The gas valve allows the proper amount of gas to pass into the burner for combustion. The gas valve on the Power-fin works under a negative pressure so gas should only be pulled through the valve when the blower is in operation.

5. **Venturi / whirlwind**
The venturi (models 2.5 - 3.0 only) and whirlwind (models 3.5 - 5.0 only) attaches to the inlet (or suction) side of the blower and generates the negative pressure needed by the gas valve.

6. **Flue sensor**
The flue sensor is mounted in the exhaust collar of the unit and monitors the flue gas temperature. If the temperature in the stack exceeds the maximum temperature the unit will shut down to prevent a hazardous condition.

7. **Outlet temperature sensor (not shown)**
This sensor monitors the outlet water temperature. If selected as the controlling sensor, the appliance will maintain set point by adjusting the firing rate of the unit according to this sensor.

8. **Inlet temperature sensor (not shown)**
This sensor monitors inlet water temperature. If selected as the controlling sensor, the appliance will maintain set point by adjusting the firing rate of the unit according to this sensor.

9. **Temperature and pressure gauge**
The temperature and pressure gauge monitors the outlet temperature of the appliance as well as the system water pressure.

10. **Electronic display**
Digital controls with SMART TOUCH screen technology, full color display, and an 8" user interface screen.

11. **Burner (not shown)**
The burner is made of a woven metal fabric over stainless steel screen construction. The burner uses pre-mixed air and gas and provides a wide range of firing rates.

12. **Water outlet (system supply)**
The water outlet is a 4" ANSI flange connection that supplies water to the system with connections for a flow switch (see #28), a relief valve (see #25), and a temperature and pressure gauge (see #9).

13. **Water inlet (system return)**
The water inlet is a 4" ANSI flange connection that receives water from the system and delivers it to the heat exchanger.

14. **Gas connection pipe**
The gas connection pipe is a threaded black iron pipe connection (see Gas Connections Section for specific model pipe size requirements). This pipe should be connected to the incoming gas supply to deliver gas to the boiler.

15. **SMART TOUCH Control Module**
The SMART TOUCH Control Module is the main control for the appliance. This module contains the programming that operates the blower, gas valve, and pumps in addition to other programmable features.

16. **Air intake**
The air intake pipe allows fresh air to flow directly to the appliance. The air inlet is part of the filter box assembly where air filtration is accomplished with a standard filter.

17. **Line voltage terminal strip**
The line voltage terminal strip provides a location to connect all of the line voltage contact points to the unit.

18. **Low voltage connection boards**
The low voltage connection board provides a location to tie in all of the low voltage contacts to the appliance. This is where most of the external safety devices are connected to the unit.

19. **Condensate trap**
The condensate trap is designed to prevent flue gases from escaping the appliance through the combustion chamber drain.

20. **Access cover - front**
The front access cover provides access to the gas train as well as the blower and other key components for service and maintenance.

21. **Ignition electrode**
An electrical spark across the electrodes will ignite the burner.

22. **Flame inspection window (sight glass)**
The flame inspection window is a quartz glass window that allows a visual inspection of the burner and flame during operation.

23. **Flame rod**
The flame rod is used to verify the presence of a flame. If no flame is present, the gas valves will close, preventing gas to the main burners.

24. **High limit sensor**
Device that monitors the outlet water temperature to ensure safe operation. If the temperature exceeds its setting (field adjustable), it will break the control circuit, shutting the appliance down.

25. **Relief valve**
The relief valve is a safety device that ensures the maximum pressure of the appliance is not exceeded. Boilers operate on pressure only and are shipped from the factory at a rating of 50 PSI.

26. **Power switch**
The power switch is used to engage and disengage power to the appliance on the line voltage circuit.

27. **Air pressure switch**
This pressure switch monitors the pressure at the outlet of the blower to prevent over pressurization due to a blockage in either the heat exchanger or the vent.

28. **Flow switch**
The flow switch is a safety device that ensures flow through the heat exchanger during operation. This appliance is low mass and should never be operated without flow. The flow switch makes contact when flow is detected and allows the unit to operate. If flow is discontinued during operation for any reason the flow switch will break the control circuit and the unit will shut down.

29. **Drain port(s)**
Location from which the heat exchanger can be drained.

30. **Manual shutoff valve (not shown)**
Manual valve used to isolate the unit from the gas supply.

The Power-fin - How it works... *(continued)*

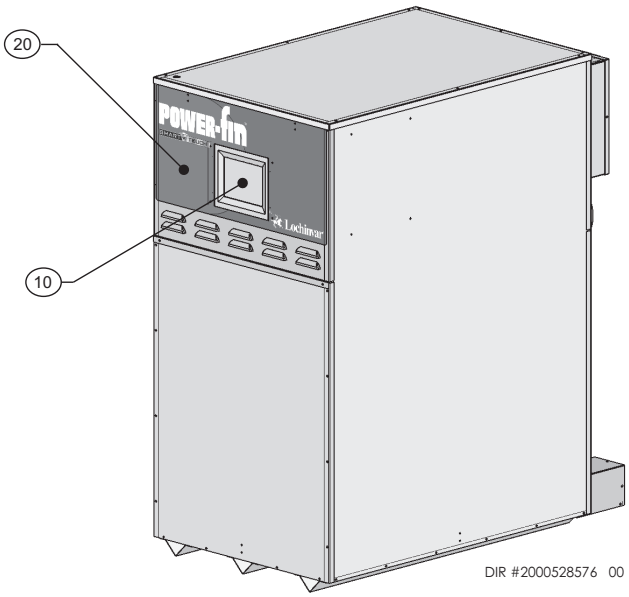

Front View

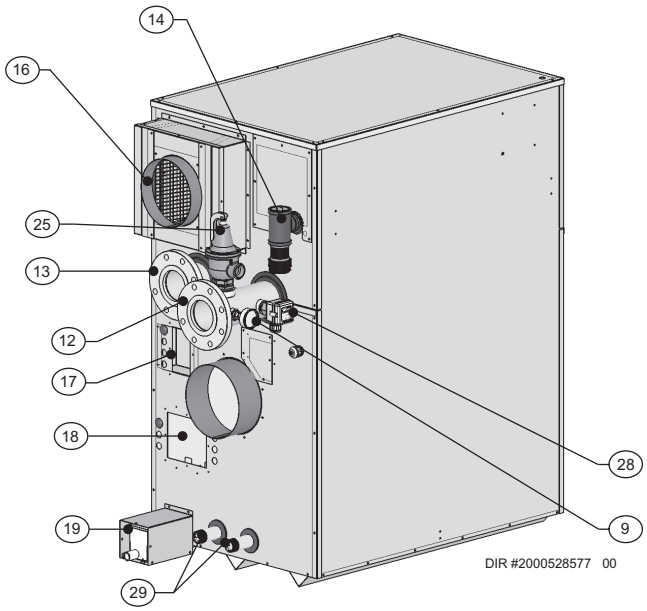

Rear View

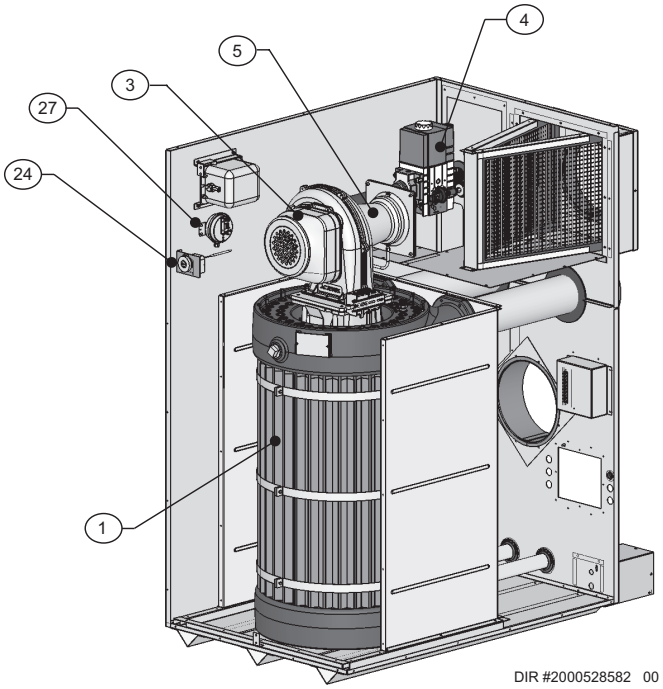

Right Side (inside unit)

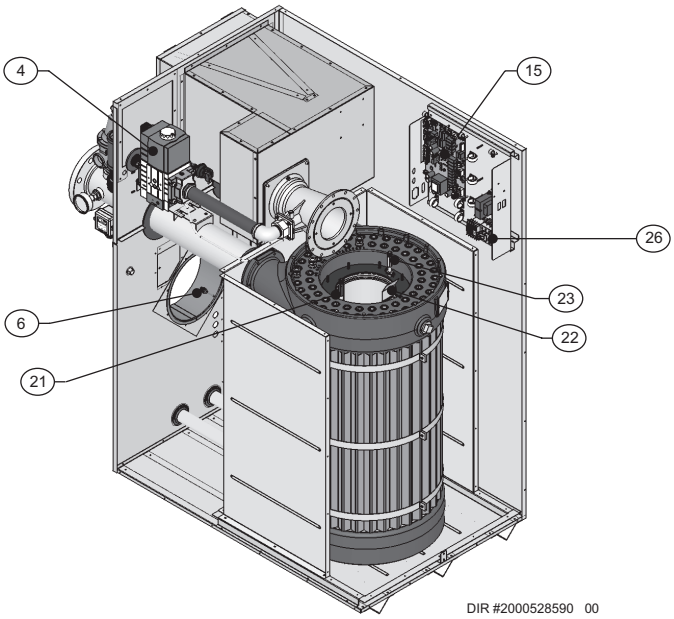

Left Side (inside unit)

Ratings

Power-fin AHRI Rating					Other Specifications						
Model Number Note: Change "N" to "L" for L.P. gas models.	Input MBH (Notes 4 - 6)		Gross Output MBH (Note 1)	Net AHRI Ratings Water, MBH (Note 2)	Appliance Water Content Gallons	Pipe Size Outlet	Pipe Size Inlet	Gas Inlet Size	Air Size	Vent Size (Note 3)	Weight w/Water (lbs.)
	Min	Max									
PBN2500	500	2500	2175	1870.5	8.4	4"	4"	2"	9"	9"	1,205
PBN3000	600	3000	2610	2244.6	9.3	4"	4"	2"	9"	10"	1,262
PBN3500	700	3500	3045	2618.7	10.2	4"	4"	2"	10"	10"	1,406
PBN4000	800	4000	3480	2992.8	11.2	4"	4"	2 1/2"	10"	12"	1,441
PBN5000	999.8	4999	4349	3741.0	13.0	4"	4"	2 1/2"	12"	14"	2,260

NOTICE Maximum allowed working pressure is located on the rating plate.

Notes:

1. The ratings are based on standard test procedures prescribed by the United States Department of Energy.
2. Net AHRI ratings are based on net installed radiation of sufficient quantity for the requirements of the building and nothing need be added for normal piping and pickup. Ratings are based on a piping and pickup allowance of 1.15.
3. Power-fin boilers require special gas venting. Use only the vent materials and methods specified in the Power-fin Installation and Operation Manual.
4. Standard Power-fin boilers are equipped to operate from sea level to 4,500 feet **only**. The boiler will de-rate by 4.5% for each 1,000 feet above sea level up to 4,500 feet.
5. High altitude Power-fin boilers are equipped to operate from 3,000 to 5,500 feet **only**. The boiler will de-rate by 2.0% for each 1,000 feet above sea level up to 5,500 feet. The operation given in this manual remains the same as the standard boilers. A high altitude label (as shown in FIG A.) is also affixed to the unit.

   De-rate values are based on proper combustion calibration and CO_2's adjusted to the recommended levels.
6. For Power-fin boiler installations above 5,500 feet contact the factory.
7. Ratings have been confirmed by the Hydronics Section of AHRI.

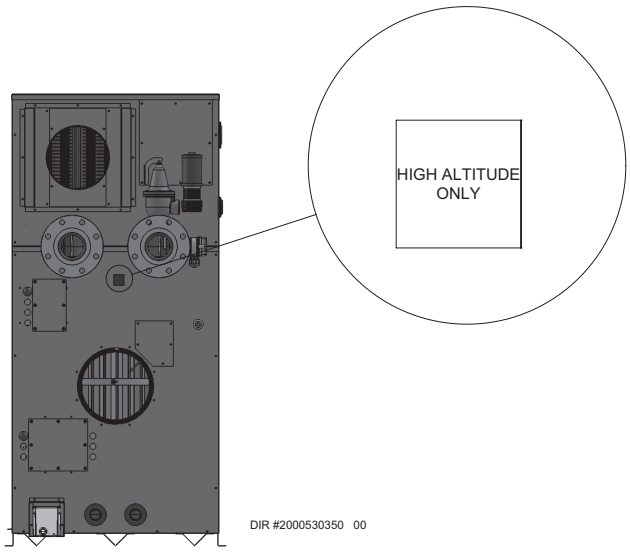

Figure A *High Altitude Label Location*

1 Determine boiler location

Installation must comply with:

- Local, state, provincial, and national codes, laws, regulations, and ordinances.
- National Fuel Gas Code, NFPA 54 / ANSI Z223.1 – latest edition.
- Standard for Controls and Safety Devices for Automatically Fired Boilers, ANSI/ASME CSD-1 - latest edition, when required.
- National Electrical Code, NFPA 70 - latest edition.
- For Canada only: CSA B149.1 Installation Code, CSA C22.1 Canadian Electrical Code Part 1 and any local codes.

NOTICE The Power-fin gas manifold and controls met safe lighting and other performance criteria when the boiler underwent tests specified in ANSI Z21.13/CSA 4.9 – latest edition.

Before locating the boiler, check:

1. Check for nearby connection to:
   - System water piping
   - Venting connections
   - Gas supply piping
   - Electrical power
2. Locate the appliance so that if water connections should leak, water damage will not occur. When such locations cannot be avoided, it is recommended that a suitable drain pan, adequately drained, be installed under the appliance. The pan must not restrict combustion air flow. Under no circumstances is the manufacturer to be held responsible for water damage in connection with this appliance, or any of its components.
3. Check area around the boiler. Remove any combustible materials, gasoline and other flammable liquids.

⚠WARNING Failure to keep boiler area clear and free of combustible materials, gasoline, and other flammable liquids and vapors can result in severe personal injury, death, or substantial property damage.

4. The Power-fin must be installed so that gas control system components are protected from dripping or spraying water or rain during operation or service.
5. If a new boiler will replace an existing boiler, check for and correct system problems, such as:
   - System leaks causing oxygen corrosion or heat exchanger cracks from hard water deposits.
   - Incorrectly-sized expansion tank.
   - Lack of freeze protection in boiler water causing system and boiler to freeze and leak.
   - Debris left from existing piping, if not flushed and cleaned with an appropriate cleaner.
6. The appliance must be installed on a level floor, both front to back and side to side, for proper condensate drainage.
7. If the optional neutralizing kit is to be used, elevate the boiler at least 3” above the floor.
8. Check around the boiler for any potential air contaminants that could risk corrosion to the boiler or the boiler combustion air supply (see Table 1A). Prevent combustion air contamination. Remove any of these contaminants from the boiler area.
9. For outdoor models, you must install an optional vent kit. Instructions for installing the vent kit are included in the kit. Do not install outdoor models directly on the ground. You must install the outdoor unit on a concrete, brick, block, or other non-combustible pad. Outdoor models have additional special location and clearance requirements. A wind proof cabinet protects the unit from weather. Vent materials are field supplied.

Outdoor boiler installation

Adequate hydronic system antifreeze must be used. A snow screen should be installed to prevent snow and ice accumulation around the unit or its venting system.

⚠WARNING DO NOT install units in rooms or environments that contain corrosive contaminants (see Table 1A). Failure to comply could result in severe personal injury, death, or substantial property damage.

⚠WARNING Do not install the appliance where the appliance will be exposed to freezing temperatures.

Do not install the appliance where condensation may form on the inside or outside of the appliance, or where condensation may fall onto the appliance.

Failure to install the appliance properly could result in severe personal injury, death, or substantial property damage.

⚠WARNING This appliance requires a special venting system. Use only the vent materials specified in this manual. Failure to follow all instructions can result in flue gas spillage and carbon monoxide emissions, causing severe personal injury or death.

1 Determine boiler location

Provide clearances:

Clearances from combustible materials

- Hot water pipes ..... 1/4"
- Sides ..... 0"
- Rear ..... 4"
- Front ..... 0"
- Top ..... 0"
- Floor..... Combustible
- Vent pipe - Follow special vent system manufacturer's instructions

Figure 1-1 *Clearances*

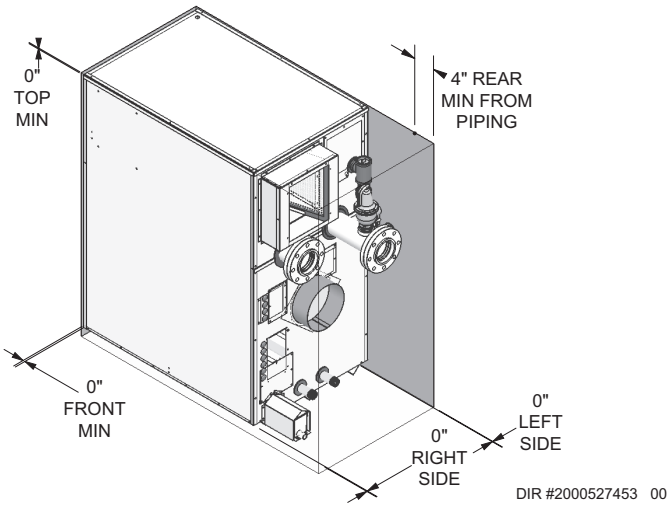

NOTICE If you do not provide the recommended service clearances shown, it may not be possible to service the boiler without removing it from the space.

Recommended clearances for service access

- Sides ..... 0"
- Rear ..... 24"
- Front ..... 24"
- Top ..... 24"

Maintain minimum specified clearances for adequate operation. All installations must allow sufficient space for servicing the vent connections, water pipe connections, piping and other auxiliary equipment, as well as the appliance. The clearance labels on each appliance note the same service and combustible clearance requirements as shown in this manual.

Multiple boilers may be installed side by side with no clearance between adjacent boilers because this boiler is approved for zero clearance from combustible surfaces; however, service access will be limited from the sides.

Consult the *Venting* section of this manual for specific installation instructions for the appropriate type of venting system that you will be using.

Provide air openings to room:

The Power-fin alone in boiler room

1. No air ventilation openings into the boiler room are needed when clearances around the Power-fin are at least equal to the SERVICE clearances shown in FIG. 1-1. For spaces that do NOT supply this clearance, provide two openings as shown in FIG. 1-1. Each opening must provide one square inch free area per 1,000 Btu/hr of boiler input.
2. Combustion air openings are required when using the Room Air Option in the Room Air section of this manual.

The Power-fin in the same space with other gas or oil-fired appliances

1. Follow the National Fuel Gas Code (U.S.) or CSA B149.1 (Canada) to size/verify size of the combustion/ventilation air openings into the space.

⚠WARNING The space must be provided with combustion/ventilation air openings correctly sized for all other appliances located in the same space as the Power-fin.

Failure to comply with the above warnings could result in severe personal injury, death, or substantial property damage.

2. Size openings only on the basis of the other appliances in the space. No additional air opening free area is needed for the Power-fin when it takes its combustion air from outside (direct vent installation).

1 Determine boiler location *(continued)*

Flooring and foundation

Flooring

The Power-fin is approved for installation on combustible flooring, but must never be installed on carpeting.

⚠WARNING Do not install the boiler on carpeting even if foundation is used. Fire can result, causing severe personal injury, death, or substantial property damage.

If flooding is possible, elevate the boiler sufficiently to prevent water from reaching the boiler.

⚠WARNING Assure that the floor and structure is sufficient to support the installed weight of the boiler, including the water content in the heat exchanger. If not, structural building failure will result, causing severe personal injury, death, or substantial property damage.

Vent and air piping

The Power-fin requires a special gas vent system, designed for pressurized venting.

The boiler is to be used for either direct vent installation or for installation using indoor combustion air. When room air is considered, see the Room Air section of this manual. Note prevention of combustion air contamination below when considering vent/air termination.

Vent and air must terminate near one another and may be vented vertically through the roof or out a side wall, unless otherwise specified. You may use any of the vent/air piping methods covered in this manual. Do not attempt to install the Power-fin using any other means.

Be sure to locate the boiler such that the vent and air piping can be routed through the building and properly terminated. The vent/air piping lengths, routing and termination method must all comply with the methods and limits given in this manual.

Prevent combustion air contamination

Install air inlet piping for the Power-fin as described in this manual. Do not terminate vent/air in locations that can allow contamination of combustion air. Refer to Table 1A for products and areas which may cause contaminated combustion air.

⚠WARNING Ensure that the combustion air will not contain any of the contaminants in Table 1A. Contaminated combustion air will damage the boiler, resulting in possible severe personal injury, death or substantial property damage. Do not pipe combustion air near a swimming pool, for example. Also, avoid areas subject to exhaust fumes from laundry facilities. These areas will always contain contaminants.

When using an existing vent system to install a new boiler:

⚠WARNING Failure to follow all instructions can result in flue gas spillage and carbon monoxide emissions, causing severe personal injury or death.

Check the following venting components before installing:

- **Material** - For materials listed for use with this appliance, see Section 2 - General Venting, Table 2A-1.
- **Size** - To ensure proper pipe size is in place, see Table 2C. Check to see that this size is used throughout the vent system.
- **Manufacturer** - Only use the listed manufacturers and their type product listed in Table 2A-1 for CAT IV positive pressure venting with flue producing condensate.
- **Supports** - Non-combustible supports must be in place allowing a minimum 1/4" rise per foot. The supports should adequately prevent sagging and vertical slippage, by distributing the vent system weight. For additional information, consult the vent manufacturer's instructions for installation.
- **Terminations** - Carefully review Sections 2 through 4 to ensure requirements for the location of the vent and air terminations are met and orientation of these fit the appropriate image from the Sidewall or Vertical options listed in the General Venting Section.
- **Seal** - With prior requirements met, the system should be tested to the procedure listed in parts (c) through (f) of the Removal of an Existing Boiler Section on the following page.

With stainless steel vent, seal and connect all pipe and components as specified by the vent manufacturer used.

1 Determine boiler location

Table 1A Corrosive Contaminants and Sources

Products to avoid:
Spray cans containing chloro/fluorocarbons
Permanent wave solutions
Chlorinated waxes/cleaners
Chlorine-based swimming pool chemicals
Calcium chloride used for thawing
Sodium chloride used for water softening
Refrigerant leaks
Paint or varnish removers
Hydrochloric acid/muriatic acid
Cements and glues
Antistatic fabric softeners used in clothes dryers
Chlorine-type bleaches, detergents, and cleaning solvents found in household laundry rooms
Adhesives used to fasten building products and other similar products
Areas likely to have contaminants
Dry cleaning/laundry areas and establishments
Swimming pools
Metal fabrication plants
Beauty shops
Refrigeration repair shops
Photo processing plants
Auto body shops
Plastic manufacturing plants
Furniture refinishing areas and establishments
New building construction
Remodeling areas
Garages with workshops

When removing a boiler from existing common vent system:

⚠ DANGER Do not install the Power-fin into a common vent with any other appliance except as noted in the Common Venting CAT II section. This will cause flue gas spillage or appliance malfunction, resulting in possible severe personal injury, death, or substantial property damage.

⚠ WARNING Failure to follow all instructions can result in flue gas spillage and carbon monoxide emissions, causing severe personal injury or death.

At the time of removal of an existing boiler, the following steps shall be followed with each appliance remaining connected to the common venting system placed in operation, while the other appliances remaining connected to the common venting system are not in operation.

a. Seal any unused openings in the common venting system.

b. Visually inspect the venting system for proper size and horizontal pitch and determine there is no blockage or restriction, leakage, corrosion, or other deficiencies, which could cause an unsafe condition.

c. Test vent system – Insofar as is practical, close all building doors and windows and all doors between the space in which the appliances remaining connected to the common venting system are located and other spaces of the building. Turn on clothes dryers and any appliance not connected to the common venting system. Turn on any exhaust fans, such as range hoods and bathroom exhausts, so they will operate at maximum speed. Do not operate a summer exhaust fan. Close fireplace dampers.

d. Place in operation the appliance being inspected. Follow the lighting instructions. Adjust thermostat so appliance will operate continuously.

e. Test for spillage at the draft hood relief opening after 5 minutes of main burner operation. Use the flame of a match or candle, or smoke from a cigarette, cigar, or pipe.

f. After it has been determined that each appliance remaining connected to the common venting system properly vents when tested as outlined herein, return doors, windows, exhaust fans, fireplace dampers, and any other gas-burning appliance to their previous conditions of use.

g. Any improper operation of the common venting system should be corrected so the installation conforms with the National Fuel Gas Code, ANSI Z223.1/NFPA 54 and/or CAN/CSA B149.1, Natural Gas and Propane Installation Code. When re-sizing any portion of the common venting system, the common venting system should be resized to approach the minimum size as determined using the appropriate tables in Part 11 of the National Fuel Gas Code, ANSI Z223.1/NFPA 54 and/or CAN/CSA B149.1, Natural Gas and Propane Installation Code.

1 Determine boiler location *(continued)*

Remove boiler from wood pallet

1. To remove the boiler from the pallet:

a. Remove the eight (8) shipping brackets securing the unit to the right and left sides of the pallet (FIG. 1-2).

b. The boiler can now be removed from the pallet using a lift truck lifting from the front or rear of the boiler. The lift truck forks must extend at least half way under the boiler heat exchanger to assure proper lifting technique with no damage to the boiler.

NOTICE Do not drop the boiler or bump the jacket on the floor or pallet. Damage to the boiler can result.

Figure 1-2 *Boiler Mounted on Shipping Pallet*

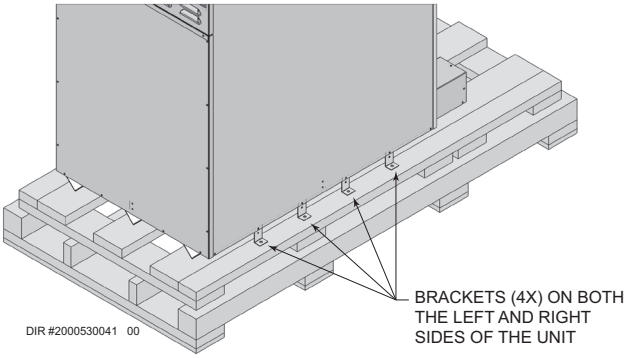

Combustion and ventilation air requirements for appliances drawing air from the equipment room

Provisions for combustion and ventilation air must be in accordance with Air for Combustion and Ventilation, of the latest edition of the National Fuel Gas Code, NFPA 54 / ANSI Z223.1, in Canada, the latest edition of CGA Standard B149 Installation Code for Gas Burning Appliances and Equipment, or applicable provisions of the local building codes.

The equipment room MUST be provided with properly sized openings and/or be of sufficient volume to assure adequate combustion air and proper ventilation for all gas fired appliances in the equipment room to assure adequate combustion air and proper ventilation.

The requirements shown are for the **appliance only**; additional gas fired appliances in the equipment room will require an increase in the net free area and/or volume to supply adequate combustion air for all appliances.

No combustion air openings are needed when the appliance is installed in a space with a volume **NO LESS** than 50 cubic feet per 1,000 Btu/hr of all installed gas fired appliances and the building **MUST NOT be of "Tight Construction"**[3].

A combination of indoor and outdoor combustion air may be utilized by applying a ratio of available volume to required volume times the required outdoor air opening(s) size(s). This must be done in accordance with the National Fuel Gas Code, NFPA 54 / ANSI Z223.1.

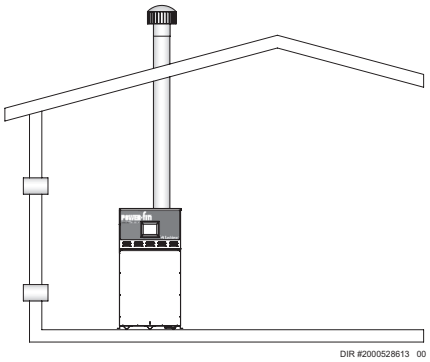

Figure 1-3_*Combustion Air Direct from Outside*

1. If air is taken directly from outside the building with no duct, provide two permanent openings to the equipment room each with a net free area of one square inch per 4000 Btu/hr input (5.5 cm^2 per kW) (see FIG. 1-3).

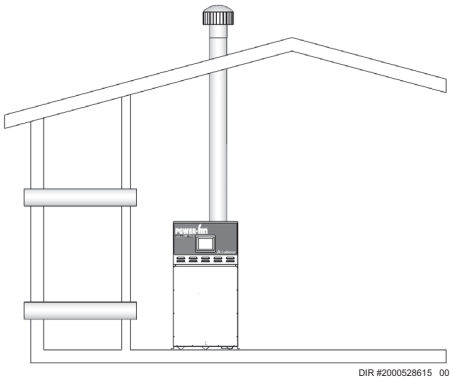

Figure 1-4_*Combustion Air Through Ducts*

2. If combustion and ventilation air is taken from the outdoors using a duct to deliver the air to the equipment room, each of the two openings should be sized based on a minimum free area of one square inch per 2000 Btu/hr (11 cm^2 per kW) of input (see FIG. 1-4).

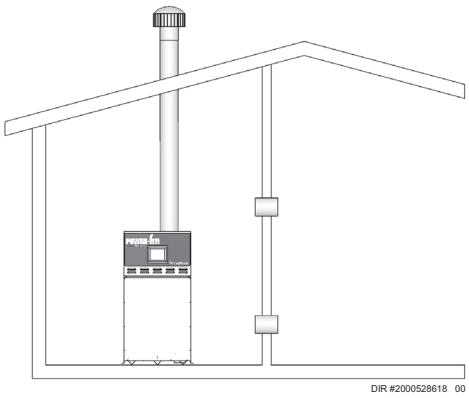

Figure 1-5_*Combustion Air from Interior Space*

1 Determine boiler location

3. If air is taken from another interior space combined with the equipment room:

(a) Two spaces on same story: Each of the two openings specified above should have a net free area of one square inch for each 1000 Btu/hr (22 cm^2 per kW) of input, but not less than 100 square inches (645 cm^2) (see FIG. 1-5).

(b) Two spaces on different stories: One or more openings should have a net free area of two square inches per 1000 Btu/hr (44 cm^2 per kW).

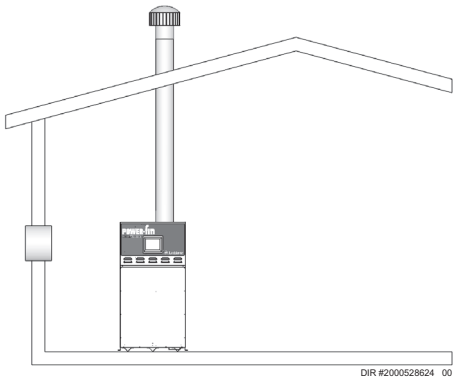

Figure 1-6_Combustion Air from Outside - Single Opening

4. If a single combustion air opening is provided to bring combustion air in directly from the outdoors, the opening must be sized based on a minimum free area of one square inch per 3000 Btu/hr (7 cm^2 per kW). This opening must be located within 12” (30 cm) of the top of the enclosure (see FIG. 1-6).

Combustion air requirements are based on the latest edition of the National Fuel Gas Code, NFPA 54 / ANSI Z223.1; in Canada refer to the latest edition of CGA Standard CAN/CSA B149.1. Check all local code requirements for combustion air.

All dimensions based on net free area in square inches. Metal louvers or screens reduce the free area of a combustion air opening a minimum of approximately 25%. Check with louver manufacturers for exact net free area of louvers.

Where two openings are provided, one must be within 12" (30 cm) of the ceiling and one must be within 12" (30 cm) of the floor of the equipment room. Each opening must have a net free area as specified in Table 1B. Single openings shall commence within 12" (30 cm) of the ceiling. The minimum dimension of air openings shall not be less than 3" (80 mm).

⚠CAUTION Under no circumstances should the equipment room ever be under negative pressure. Particular care should be taken where exhaust fans, attic fans, clothes dryers, compressors, air handling units, etc., may take away air from the unit.

The combustion air supply must be completely free of any flammable vapors that may ignite or chemical fumes which may be corrosive to the appliance. Common corrosive chemical fumes which must be avoided are fluorocarbons and other halogenated compounds, most commonly present as refrigerants or solvents, such as Freon, trichlorethylene, perchloroethylene, chlorine, etc. These chemicals, when burned, form acids which quickly attack the heat exchanger, headers, flue collectors, and the vent system.

The result is improper combustion and a non-warrantable, premature appliance failure.

EXHAUST FANS: Any fan or equipment which exhausts air from the equipment room may deplete the combustion air supply and/or cause a downdraft in the venting system. Spillage of flue products from the venting system into an occupied living space can cause a very hazardous condition that must be corrected immediately.

1 Determine boiler location *(continued)*

TABLE - 1B MINIMUM RECOMMENDED COMBUSTION AIR SUPPLY TO EQUIPMENT ROOM								
Model Number	FIG. 1-3		FIG. 1-4		FIG. 1-5			FIG. 1-6
	*Outside Air from 2 Openings Directly from Outdoors[1]		*Outside Air from 2 Ducts Delivered from Outdoors[1]		Inside Air from 2 Ducts Delivered from Interior Space[2]			*Outside Air from 1 Opening Directly from Outdoors, in² (cm²)[1]
					Same Story		Different Stories	
	Top Opening, in² (cm²)	Bottom Opening, in² (cm²)	Top Opening, in² (cm²)	Bottom Opening, in² (cm²)	Top Opening, in² (cm²)	Bottom Opening, in² (cm²)	Total Opening, in² (cm²)	
2500	625 (4033)	625 (4033)	1250 (8065)	1250 (8065)	2500 (16129)	2500 (16129)	5000 (32258)	833 (5381)
3000	750 (4839)	750 (4839)	1500 (9678)	1500 (9678)	3000 (19355)	3000 (19355)	6000 (38710)	1000 (6452)
3500	875 (5646)	875 (5646)	1750 (11291)	1750 (11291)	3500 (22581)	3500 (22581)	7000 (45162)	1167 (7530)
4000	1000 (6450)	1000 (6450)	2000 (12900)	2000 (12900)	4000 (25800)	4000 (25800)	8000 (51600)	1333 (8600)
5000	1250 (8062)	1250 (8062)	2500 (16129)	2500 (16129)	5000 (32250)	5000 (32250)	10000 (64500)	1667 (10750)

The above requirements are for the **appliance only**; additional gas fired appliances in the equipment room will require an increase in the net free area and/or volume to supply adequate combustion air for all appliances.

No combustion air openings are needed when the appliance is installed in a space with a volume NO LESS than 50 cubic feet per 1,000 Btu/hr of all installed gas fired appliances. **Buildings MUST NOT be of *"Tight Construction"[3].**

[1]Outside air openings shall directly communicate with the outdoors.

[2]Combined interior space must be 50 cubic feet per 1,000 Btu/hr input. **Buildings MUST NOT be of *"Tight Construction".**

[3]**"Tight Construction"** is defined as a building with less than 0.40 ACH (air changes per hour). For buildings of **"Tight Construction"**, provide air openings into the building from outside.

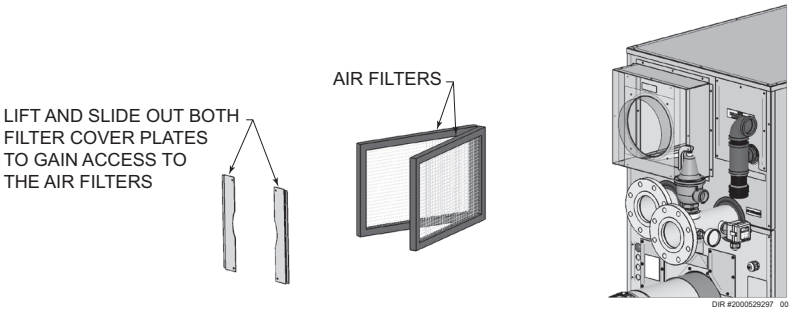

Figure 1-8_Filter Access

Combustion air filter

This unit has two (2) standard air filters located at the combustion air inlet as shown above in FIG. 1-8. These air filters are provided to help ensure clean air is used for the combustion process. Check filters every month and replace when necessary. The filter size for Models 2.5 - 3.5 is 20" x 14" x 1" (50.8 cm x 35.5 cm x 2.5 cm) and for Models 4.0 - 5.0 it is 25" x 16" x 1" (63.5 cm x 40.6 cm x 2.5 cm). You can find these commercially available filters at any home center or HVAC supply store.

NOTICE Replace filters with a MERV rating no greater than 4.0.

Follow the steps below when replacing the combustion air filter:

1. Locate the combustion air filter box mounted on the rear of the appliance.
2. Remove four (4) #10 hex head fasteners from the filter cover plates (see FIG. 1-8).
3. Lift and slide out both filter cover plates to gain access to the air filters.
4. Slide each air filter out the back slot openings of the air filter box.
5. Inspect the air filters for dirt and debris, replace if necessary.
6. Replace the air filters and the filter box cover plates. Replace the four (4) #10 hex head fasteners to secure the filter cover plates to the air filter box.

NOTICE During construction the air filter should be checked more frequently to ensure it does not become clogged with combustion dirt and debris.

CAUTION Sustained operation of an appliance with a clogged burner may result in nuisance operational problems, bad combustion, and non-warrantable component failures.

2 General venting

Direct venting

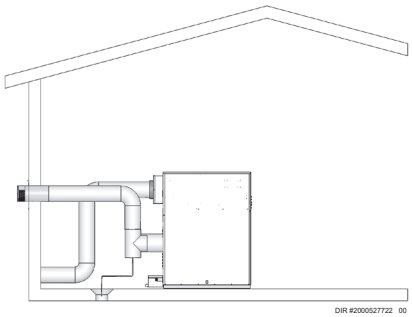

Sidewall

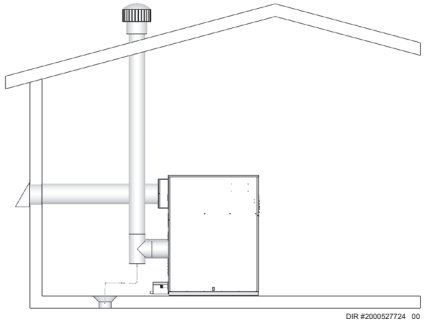

Vertical Vent, Sidewall Air

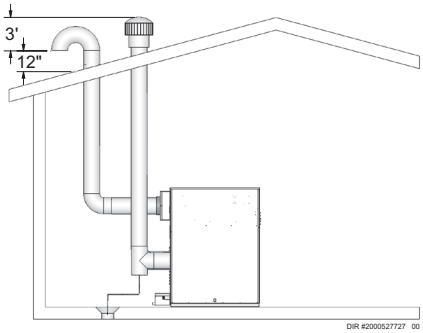

Vertical

Optional room air

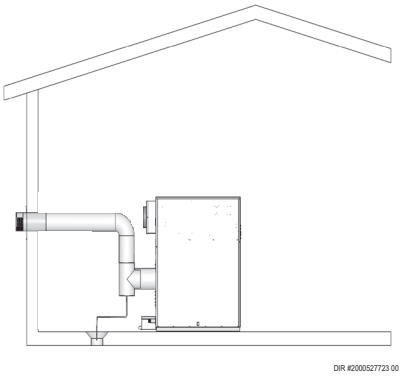

Sidewall

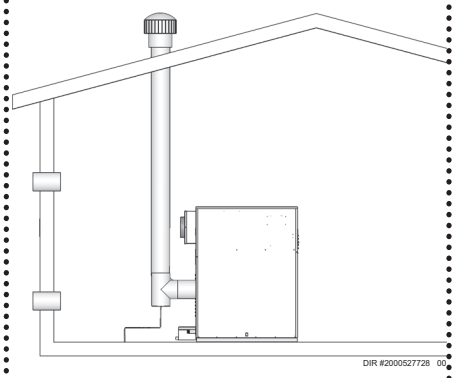

Vertical

Outdoor venting

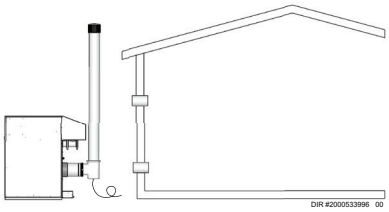

2 General venting *(continued)*

Install vent and combustion air piping

⚠ DANGER The Power-fin must be vented and supplied with combustion and ventilation air as described in this section. Ensure the vent and air piping and the combustion air supply comply with these instructions regarding vent system, air system, and combustion air quality. See also Section 1 of this manual.

Inspect finished vent and air piping thoroughly to ensure all are airtight and comply with the instructions provided and with all requirements of applicable codes.

Failure to provide a properly installed vent and air system will cause severe personal injury or death.

Air inlet pipe materials:

The air inlet pipe(s) must be sealed. Choose acceptable combustion air inlet pipe materials from the following list:

ABS, PVC, or CPVC
Dryer Vent or Sealed Flexible Duct (not recommended for rooftop air inlet)
Galvanized steel vent pipe with joints and seams sealed as specified in this section.
Type "B" double-wall vent with joints and seams sealed as specified in this section.
AL29-4C, stainless steel material to be sealed to specification of its manufacturer.

*Plastic pipe may require an adapter (not provided) to transition between the air inlet connection on the appliance and the plastic air inlet pipe.

⚠ WARNING Using vent or air intake materials other than those specified, failure to properly seal all seams and joints or failure to follow vent pipe manufacturer's instructions can result in personal injury, death or property damage. Mixing of venting materials will void the warranty and certification of the appliance.

NOTICE The use of double-wall vent or insulated material for the combustion air inlet pipe is recommended in cold climates to prevent the condensation of airborne moisture in the incoming combustion air.

Sealing of Type "B" double-wall vent material or galvanized vent pipe material used for air inlet piping on a sidewall or vertical rooftop Combustion Air Supply System:

a. Seal all joints and seams of the air inlet pipe using either Aluminum Foil Duct Tape meeting UL Standard 723 or 181A-P or a high quality UL Listed silicone sealant such as those manufactured by Dow Corning or General Electric.

b. Do not install seams of vent pipe on the bottom of horizontal runs.

c. Secure all joints with a minimum of three sheet metal screws or pop rivets. Apply Aluminum Foil Duct Tape or silicone sealant to all screws or rivets installed in the vent pipe.

d. Ensure that the air inlet pipes are properly supported.

The PVC, CPVC, or ABS air inlet pipe should be cleaned and sealed with the pipe manufacturer's recommended solvents and standard commercial pipe cement for the material used. The ABS, PVC, CPVC, air inlet pipe should use a silicone sealant to ensure a proper seal at the appliance connection and the air inlet cap connection. Dryer vent or flex duct should use a screw type clamp to seal the vent to the appliance air inlet and the air inlet cap. Proper sealing of the air inlet pipe ensures that combustion air will be free of contaminants and supplied in proper volume.

When a sidewall or vertical rooftop combustion air supply system is disconnected for any reason, the air inlet pipe must be resealed to ensure that combustion air will be free of contaminants and supplied in proper volume.

⚠ DANGER Failure to properly seal all joints and seams as required in the air inlet piping may result in flue gas recirculation, spillage of flue products and carbon monoxide emissions causing severe personal injury or death.

2 General venting

Vent and air piping

The Power-fin is certified as a Category II/IV boiler. **This product has been approved for use with stainless steel vent systems.** All venting systems used with a Power-fin boiler must be suitable for Category IV operation except for factory approved common vent systems operating as allowed in the Common Venting Section.

The flue products in the vent system may be cooled below their dew point and form condensate in the flue. The flue materials used for a Category IV vent must be resistant to any corrosive damage from flue gas condensate. The flue from a Category IV vent system must have a condensate drain with provisions to properly collect and dispose of any condensate that may occur in the venting system.

⚠WARNING Use only the materials, vent systems, and terminations listed in Tables 2A-1 and 2A-2. DO NOT mix vent systems of different types or manufacturers, unless listed in this manual. Failure to comply could result in severe personal injury, death, or substantial property damage.

NOTICE Installations must comply with applicable national, state, and local codes. Stainless steel vent systems must be listed as a UL-1738 approved system for the United States and a ULC-S636 approved system for Canada.

NOTICE Installation of a stainless steel vent system should adhere to the stainless steel vent manufacturer's installation instructions supplied with the vent system.

NOTICE The Power-fin is supplied with an integral FasNSeal vent connector. The installer must use a specific vent starter adapter supplied by the vent manufacturer to adapt to different vent systems.

Air intake/vent connections

1. **Combustion Air Intake Connector** (FIG. 2-1) - Used to provide combustion air directly to the unit from outdoors. A fitting is provided with the unit for final connection. Combustion air piping must be supported per guidelines listed in the National Mechanical Code, Section 305, Table 305.4 or as local codes dictate.
2. **Vent Connector** - Used to provide a passageway for conveying combustion gases to the outside. A transition fitting is provided on the unit for final connection. Vent piping must be supported per the National Building Code, Section 305, Table 305.4 or as local codes dictate.

Figure 2-1 *Combustion Air Adapter*

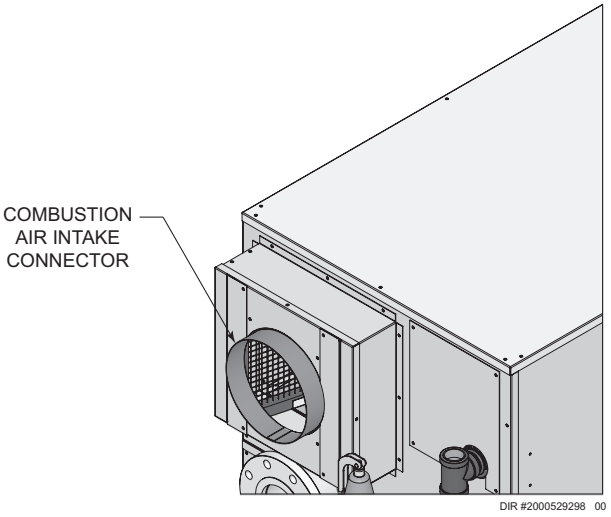

The Power-fin uses model specific combustion air intake and vent piping sizes as detailed in Tables 2B and 2C.

NOTICE Increasing or decreasing combustion air or vent piping to sizes not specified in this manual is not authorized.

Table 2A-1 *Approved Stainless Steel Vent Manufacturers*

Approved Stainless Steel Vent Manufacturers	
Make	**Model**
ProTech Systems (Dura-Vent Co.)	FasNSeal Vent
Z-Flex (Nova Flex Group)	Z-Vent
Heat Fab (Selkirk Corporation)	Saf-T Vent
Metal Fab	Corr/Guard
Securities Chimneys International	Secure Seal SS
DuraVent	DuraSeal DS
Schebler Chimney Systems	eVent
ICC	VIC
Jeremias	--
Enervex	Powerstack
Van Packer	--

2 General venting *(continued)*

Table 2A-2 *Approved Stainless Steel Terminations and Adapters - Category IV*

Model	ProTech		Z Flex		Heat Fab		
	Adapter	Intake	Adapter	Intake	Adapter	Flue	Intake
2500	810003982	810003397 810003409	2SVDSA09	2SVEE990	9901MAD	CCK09TM	9890 9992
3000 - 3500	810003984	810003435 810003447	2SVDSA10	2SVEE1090	91001MAD	CCK10TM	91090 91092
4000	810003987	810003476 810003488	2SVDSA12	2SVEE1290	91201MAD	CCK12TM	91290 91292
5000	810003990	810003516 810003528	2SVDSA14	2SVEE1490	91401MAD	CCK14TM	91490 91492

Model	Metal-Fab			Security Chimney			ICC		
	Adapter	Flue	Intake	Adapter	Flue	Intake	Adapter	Flue	Intake
2500	8FCGLCA	MC 6-36"	8FCGSW90	SS9CRESTU	SS0MCU 4" - 24"	SSE9E9OU SDOST90AUK 4" - 10"	HE-9DSA-F	HE-9SCR-F HE-9MC-F	HE-8E90-F HE-9SCR-F
3000 - 3500	10FCGLCA	MC 6-36"	10FCGSW90	SS10CRESTU	SS0MCU 4" - 24"	SSE10E9OU SDOST90AUK 4" - 10"	HE-10DSA-F	HE-10SCR-F HE-10MC-F	HE-10E90-F HE-10SCR-F
4000	12FCGLCA	MC 6-36"	12FCGSW90	SS12CRESTU	SS0MCU 4" - 24"	SSE12E9OU	HE-12DSA-F	HE-12SCR-F HE-12MC-F	HE-12E90-F HE-12SCR-F
5000	14FCGLCA	MC 6-36"	14FCGSW90	SS14CRESTU	SS0MCU 4" - 24"	SSE14E9OU	HE-14DSA-F	HE-14SCR-F HE-14MC-F	HE-14E90-F HE-14SCR-F

Model	Jeremias			DuraVent		
	Adapter	Flue	Intake	Adapter	Flue	Intake
2500	SWKL9-KLC	SWKL9-WRC	SWKL9-90ET	DS9CRESTU	DS0MCU 4" - 24"	DSE9E90U DS0ST90AUK 4" - 10"
3000 - 3500	SWKL10-KLC	SWKL10-WRC	SWKL10-90ET	DS10CRESTU	DS0MCU 4" - 24"	DSE10E90U DS0ST90AUK 4" - 10"
4000	SWKL12-KLC	SWKL12-WRC	SWKL12-90ET	DS12CRESTU	DS0MCU 4" - 24"	DSE12E90U
5000	SWKL14-KLC	SWKL14-WRC	SWKL14-90ET	DS14CRESTU	DS0MCU 4" - 24"	DSE14E90U

Model	Enervex			Van Packer	
	Adapter	Flue	Intake	Adapter	Intake
2500	801.0676.4709	801.0679.XX10	801.0676.0408	MM09MOAB	M0890EB & M06SCTB
3000 - 3500	801.0676.4710	801.0679.XX10	801.0676.0410	MM10MOAB	M1090EB & M06SCTB
4000	801.0676.4712	801.0679.XX12	801.0676.0412	MM12MOAB	M1290EB & M06SCTB
5000	801.0676.4712	801.0679.XX12	801.0676.0412	MM14MOAB	M1490EB & M06SCTB

2 General venting *(continued)*

Table 2B *Direct Vent Minimum / Maximum Allowable Air / Vent Lengths*

Model	AIR INLET			VENT			Input De-Rate per 25 feet of Vent
	Air Intake Diameter	Air Intake Min. Length	Air Intake Max. Length	Vent Diameter	Vent Min. Length (CAT IV only)	Vent Max. Length (CAT IV only)	
2500	9"	12'	100'	9"	18'	100'	2.5%
3000	9"	12'	100'	10"	18'	100'	2.5%
3500	10"	12'	100'	10"	18'	100'	2.5%
4000	10"	12'	100'	12"	18'	100'	2.5%
5000	12"	12'	100'	14"	18'	100'	2.5%

Table 2C *Room Air Minimum / Maximum Allowable Air / Vent Lengths*

Model	Vent Diameter	Vent Min. Length (CAT IV only)	Vent Max. Length (CAT IV only)	Input De-Rate per 25 feet of Vent
2500	9"	18'	100'	1%
3000	9"	18'	100'	1%
3500	10"	18'	100'	1%
4000	12"	18'	100'	0%
5000	14"	18'	100'	0%

2 General venting

When determining equivalent combustion air and vent length, add 5 feet (1.5m) for each 90° elbow and 3 feet (.9 m) for each 45° elbow.

EXAMPLE: 20 feet (6 m) of pipe + (4) 90° elbows + (3) 45° elbows = 49 equivalent feet (15 m) of piping.

Removing from existing vent

Follow the instructions in the Removing a Boiler from Existing Common Vent Section of this manual when removing a boiler from an existing vent system.

Vent and air piping

Vent and air system:

NOTICE Installation must comply with local requirements and with the National Fuel Gas Code, NFPA 54 / ANSI Z223.1 for U.S. installations or CSA B149.1 for Canadian installations.

You must also install air piping from outside to the boiler air intake adapter. The resultant installation is direct vent (sealed combustion).

You may use any of the vent/air piping methods covered in this manual. Do not attempt to install the Power-fin using any other means.

⚠WARNING DO NOT mix components from different systems. The vent system could fail, causing leakage of flue products into the living space. Use only approved stainless steel pipe and fittings.

Vent, air piping and termination:

The Power-fin vent and air piping can be installed through the roof or through a sidewall. Follow the procedures in this manual for the method chosen. Refer to the information in this manual to determine acceptable vent and air piping length.

Air contamination

Pool and laundry products and common household and hobby products often contain fluorine or chlorine compounds. When these chemicals pass through the boiler, they can form strong acids. The acid can eat through the boiler wall, causing serious damage and presenting a possible threat of flue gas spillage or boiler water leakage into the building.

Please read the information given in Table 1A listing contaminants and areas likely to contain them. If contaminating chemicals will be present near the location of the boiler combustion air inlet, have your installer pipe the boiler combustion air and vent to another location, per this manual.

⚠WARNING If the boiler combustion air inlet is located in a laundry room or pool facility, for example, these areas will always contain hazardous contaminants.

⚠WARNING To prevent the potential of severe personal injury or death, check for areas and products listed in Table 1A before installing the boiler or air inlet piping.

If contaminants are found, you MUST:

- Remove products permanently.

—OR—

- Relocate air inlet and vent terminations to other areas.

Common venting CAT II:

Flues of multiple appliances may be combined by incorporating a vent increaser to change the Category IV appliance to a Category II vent system which can be common vented using an engineered vent system. An increaser must be used and the combined engineered vent system must be designed to ensure that flue products will be properly exhausted from the building at all times. **Failure to use the correct vent increaser or a properly sized vent system may result in a hazardous condition where flue gases spill into an occupied living space.** Consult a vent designer to determine the diameter of the common vent pipe required for combined vent installation. It is recommended that all vent joints and seams are sealed gastight. This vent system has specific vent material and installation requirements. The negative draft in a conventional vent installation must be within the range of 0.02 to 0.08 inches w.c. to ensure proper operation. Make all draft readings while the unit is in stable operation (approximately 2 to 5 minutes).

***Table 2D** Category IV to Category II Conversion Chart*

Model	Category IV Standard Vent Size	Category II Increaser Size
2500	9"	10"
3000	10"	12"
3500	10"	12"
4000	12"	14"
5000	14"	16"

2 General venting *(continued)*

Outdoor venting

- In order to properly vent the appliance in an outdoor configuration the optional outdoor vent kit must be used (see Table 2E).
- Vent materials for outdoor venting are to be field supplied.
- The vent must terminate at least 36 inches above the top of the unit.
- All vent materials must be supported as recommended by the vent manufacturer.
- The terminations in Table 2F must be used.

***Table 2E** Outdoor Vent Kits*

Model	Outdoor Kit
2500 - 3000	100274941
3500	100274942
4000	100274943
5000	100274944

NOTICE Before installing a venting system, follow all requirements found in the General Venting section of this manual.

Units are self-venting and can be used outdoors when installed with the optional outdoor kit. All vent materials must be field supplied and supported per the vent manufacturer's instructions.

⚠WARNING Only install outdoor models outdoors, and only use the vent caps specified in this manual. Personal injury or product damage may result if any other cap is used, or if an outdoor model is used indoors. Properly install all covers, doors, and jacket panels to ensure proper operation and prevent a hazardous condition.

Combustion air supply must be free of contaminants (see the Combustion and Ventilation Air Requirements section of this manual). To prevent recirculation of the flue products into the combustion air inlet, follow all instructions in this section.

Outdoor vent / air inlet location

Keep venting areas free of obstructions. Keep area clean and free of combustible and flammable materials. Maintain minimum clearances to combustibles as stated in this manual.

Do not install outdoor models directly on the ground. You must install the outdoor unit on a concrete, brick, block, or pressure-treated wood platform.

***Table 2F**_Approved Adapters and Flue Terminations*

Model	ProTech		Z-Flex		Heat Fab		Metal Fab		Security Chimney	
	Adapter	Flue	Adapter	Flue	Adapter	Flue	Adapter	Flue	Adapter	Flue
2500	810003982	FSCN0907	2SVDSA09	2SVSXITC09	9901MAD	CCA09EX07	8FCGLCA	9FCSEC-C60	SS9CRESTU	SS9ECU
3000 - 3500	810003984	FSCN1008	2SVDSA10	2SVSXITC10	91001MAD	CCA10EX08	10FCGLCA	10FCSEC-C60	SS9CRESTU	SS10ECU
4000	810003987	FSCN1210	2SVDSA12	2SVSXITC12	91201MAD	CCA12EX10	12FCGLCA	12FCSEC-C60	SS12CRESTU	SS12ECU
5000	810003990	FSCN1412	2SVDSA14	2SVSXITC14	91401MAD	CCA14EX12	14FCGLCA	14FCSEC-C60	SS14CRESTU	SS14ECU

3 Vertical direct venting

Vent/air termination – vertical

⚠WARNING Follow instructions below when determining vent location to avoid possibility of severe personal injury, death or substantial property damage.

⚠WARNING Do not connect any other appliance to the vent pipe or multiple boilers to a common vent pipe except as noted in the Common Venting CAT II Section. Failure to comply could result in severe personal injury, death, or substantial property damage.

NOTICE Installation must comply with local requirements and with the National Fuel Gas Code, NFPA 54 / ANSI Z223.1 - latest edition for U.S. installations or CSA B149.1 Installation Code for Canadian installations.

Determine location

Locate the vent/air terminations using the following guidelines:

1. The total length of piping for vent or air must not exceed the limits given in the General Venting Section Table 2B and Table 2C in this manual.
2. The vent must terminate at least 3 feet above the highest place in which the vent penetrates the roof and at least 2 feet above any part of a building within 10 horizontal feet.
3. The air piping must terminate in a down-turned 180° return pipe no further than 2 feet (.6 m) from the center of the vent pipe. This placement avoids recirculation of flue products into the combustion air stream.
4. The vent piping must terminate in an up-turned coupling as shown in FIG. 3-1. The top of the coupling or the rain cap must be at least 36" (914 mm) above the air intake. The air inlet pipe and vent pipe can be located in any desired position on the roof, but must always be no further than 2 feet (.6 m) apart and with the vent termination at least 36" (914 mm) above the air intake.

⚠WARNING Rooftop vent and air inlet terminations must terminate in the same pressure zone, unless vertical vent sidewall air is set up as shown in the General Venting - Vertical Vent, Sidewall Air Section.

Figure 3-1 *Vertical Termination of Air and Vent*

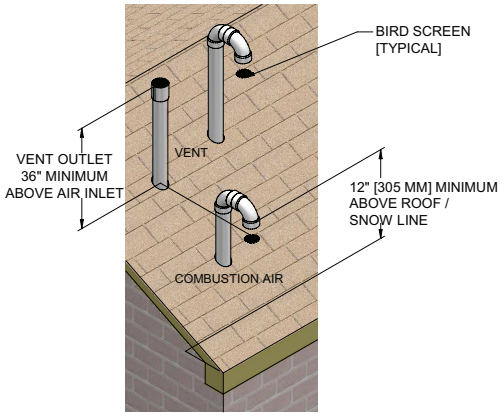

Figure 3-2 *Vertical Termination of Air and Vent w/Rain Cap*

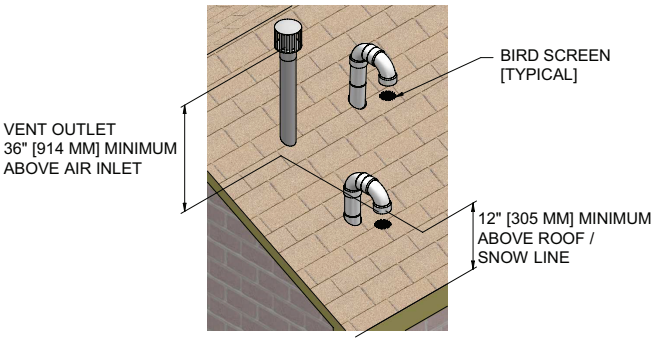

5. Locate terminations so they are not likely to be damaged by foreign objects, such as stones or balls, or subject to build-up of leaves or sediment.

Prepare roof penetrations

1. Air pipe penetration:
   a. Cut a hole for the air pipe. Size the air pipe hole as close as desired to the air pipe outside diameter.
2. Vent pipe penetration:
   a. Cut a hole for the vent pipe. For either combustible or noncombustible construction, size the vent pipe hole per the vent manufacturer's instructions.
   b. Insert a galvanized metal thimble in the vent pipe hole (when required by local codes).
3. Space the air and vent holes to provide the minimum spacing shown in FIG. 3-1.
4. Follow all local codes for isolation of vent pipe when passing through floors, ceilings, and roofs.
5. Provide flashing and sealing boots sized for the vent pipe and air pipe.

Termination and fittings

1. Prepare the vent termination coupling and the air termination elbow (FIG. 3-1) by inserting bird screens.
2. The air piping must terminate in a down-turned 180° return bend as shown in FIG. 3-1. Locate the air inlet pipe no further than 2 feet (.6 m) from the center of the vent pipe. This placement avoids recirculation of flue products into the combustion air stream.

3 Vertical direct venting *(continued)*

3. The vent piping must terminate in an up-turned coupling as shown in FIG. 3-1. The top of the coupling or the rain cap must be at least 36" (914 mm) above the air intake. The air inlet pipe and vent pipe can be located in any desired position on the roof, but must always be no further than 2 feet (.6 m) apart and with the vent termination at least 36" (914 mm) above the air intake.
4. Maintain the required dimensions of the finished termination piping as shown in FIG. 3-1.
5. Do not extend exposed vent pipe outside of building more than shown in this document. Condensate could freeze and block vent pipe.

Multiple vent/air terminations

1. When terminating multiple Power-fin boilers, terminate each vent/air connection as described in this manual (FIG. 3-3).

⚠WARNING Terminate all vent pipes at the same height and all air pipes at the same height to avoid recirculation of flue products and the possibility of severe personal injury, death, or substantial property damage.

2. Place roof penetrations to obtain minimum clearance of 12 inches (305 mm) between edge of air intake elbow and adjacent vent pipe of another boiler for U.S. installations (see FIG. 3-3). For Canadian installations, provide clearances required by CSA B149.1 Installation Code.
3. The air inlet of a Power-fin boiler is part of a direct vent connection. It is not classified as a forced air intake with regard to spacing from adjacent boiler vents.

Figure 3-4 *Alternate Vertical Terminations with Multiple Boilers*

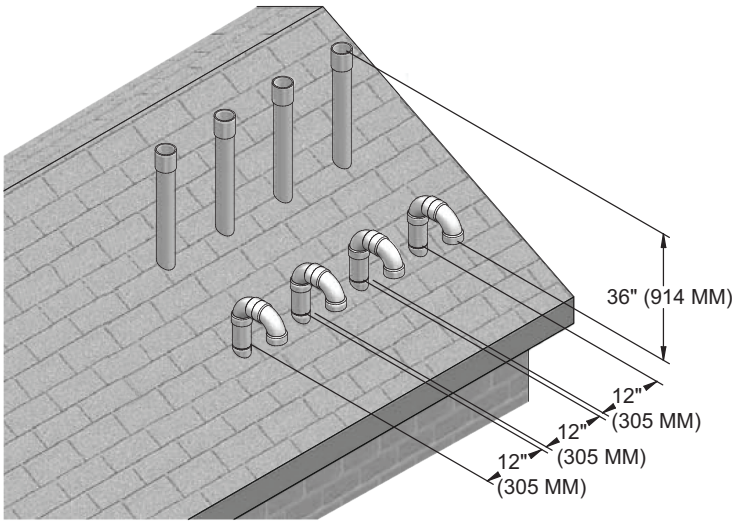

DIR# 2000539526

Figure 3-3 *Vertical Terminations with Multiple Boilers*

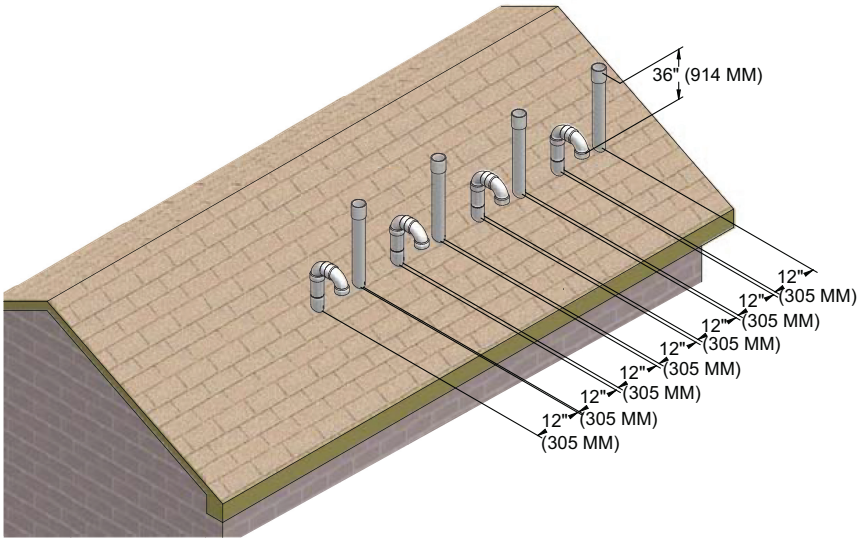

DIR# 2000539525

4 Sidewall direct venting

Vent/air termination – sidewall

⚠WARNING Follow instructions below when determining vent location to avoid possibility of severe personal injury, death, or substantial property damage.

⚠WARNING A gas vent extending through an exterior wall shall not terminate adjacent to a wall or below building extensions such as eaves, parapets, balconies, or decks. Failure to comply could result in severe personal injury, death, or substantial property damage.

⚠WARNING Do not connect any other appliance to the vent pipe or multiple boilers to a common vent pipe except as noted in the Common Venting CAT II Section. Failure to comply could result in severe personal injury, death, or substantial property damage.

⚠ CAUTION Sidewall venting commercial products will result in large exhaust plumes in cold climates. Consideration should be taken when locating in proximity to windows, doors, walkways, etc.

NOTICE Installation must comply with local requirements and with the National Fuel Gas Code, NFPA 54 / ANSI Z223.1 for U.S. installations or CSA B149.1 for Canadian installations.

Determine location

Locate the vent/air terminations using the following guidelines:

1. The total length of piping for vent or air must not exceed the limits given in the General Venting Section in Table 2B and Table 2C in the manual.

2. You must consider the surroundings when terminating the vent and air:
   a. Position the vent termination where vapors will not damage nearby shrubs, plants or air conditioning equipment or be objectionable.
   b. The flue products will form a noticeable plume as they condense in cold air. Avoid areas where the plume could obstruct window views.
   c. Prevailing winds could cause freezing of condensate and water/ice build-up where flue products impinge on building surfaces or plants.
   d. Avoid possibility of accidental contact of flue products with people or pets.
   e. Do not locate the terminations where wind eddies could affect performance or cause recirculation, such as inside building corners, near adjacent buildings or surfaces, window wells, stairwells, alcoves, courtyards, or other recessed areas.

⚠WARNING Sidewall vent and air inlet terminations must terminate in the same pressure zone.

   f. Do not terminate above any door or above or below any window. Condensate can freeze, causing ice formations.
   g. Locate or guard vent to prevent condensate damage to exterior finishes.

***Figure 4-1** Sidewall Termination of Air and Vent*

NOTICE PVC/CPVC or ABS is acceptable air inlet pipe material.

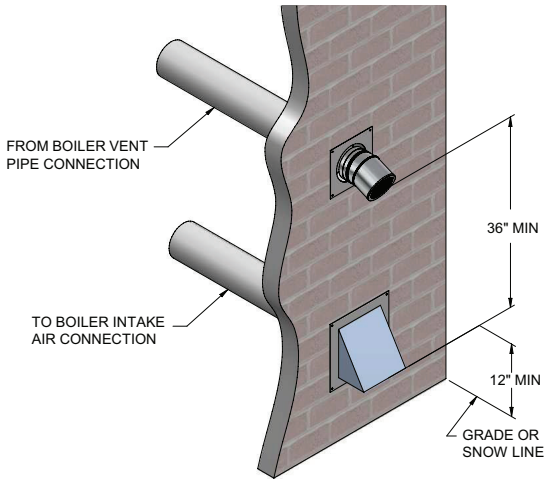

3. Maintain clearances as shown in FIG.'s 4-1 thru 4-3. The vent termination should not be located in traffic areas such as walkways, adjacent buildings, operable windows, or doors. Also maintain the following:
   a. Vent must terminate:
      - At least 6 feet (1.8 m) from adjacent walls.
      - Not less than 7 feet (2.1 m) above grade where located adjacent to public walkways.
      - No closer than 12 inches (305 mm) below roof overhang.
      - At least 3 feet (.9 m) above any forced air intake within 10 feet (3 m).
      - No closer than 4 feet (1.2 m) horizontally from any door or window or any other gravity air inlet.
   b. Air inlet must terminate at least 12 inches (305 m) above grade or snow line; at least 36 inches (914 mm) below the vent termination.
   c. Do not terminate closer than 4 feet (1.2 m) horizontally from any electric meter, gas meter, regulator, relief valve, or other equipment. Never terminate above or below any of these within 4 feet (1.2 m) horizontally.

4. Locate terminations so they are not likely to be damaged by foreign objects, such as stones or balls, or subject to build-up of leaves or sediment.

4 Sidewall direct venting *(continued)*

Vent/air termination – sidewall

Figure 4-2 *Clearance to Doors and Windows*

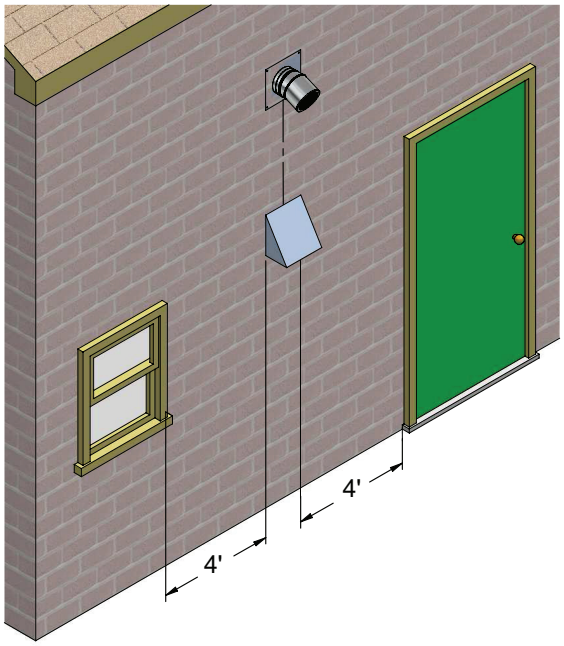

Figure 4-3 *Clearance to Forced Air Inlets*

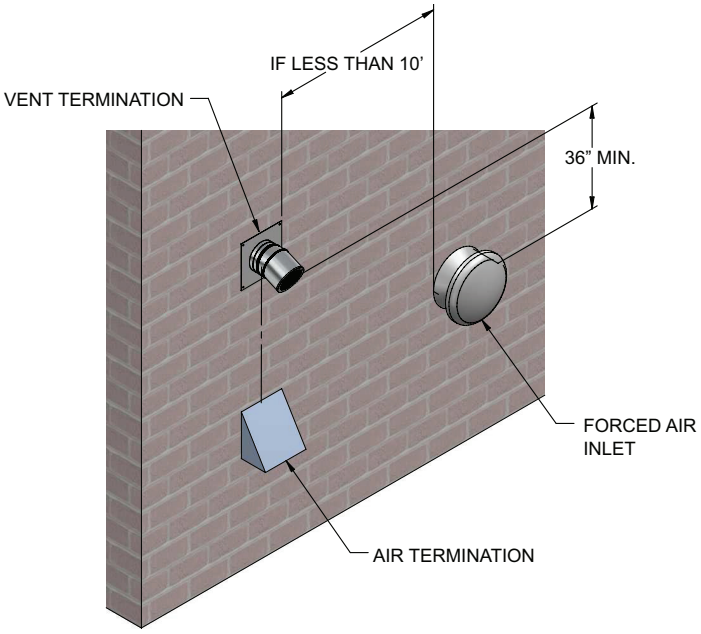

⚠ CAUTION Sidewall venting commercial products will result in large exhaust plumes in cold climates. Consideration should be taken when locating in proximity to windows, doors, walkways, etc.

Prepare wall penetrations

1. Air pipe penetration:
   a. Cut a hole for the air pipe. Size the air pipe hole as close as desired to the air pipe outside diameter.

   Vent pipe penetration:
   a. Cut a hole for the vent pipe. For either combustible or noncombustible construction, size the vent pipe hole per the vent manufacturer's instructions.

2. Install the vent and air intake piping. Seal all gaps between the pipes and wall with RTV silicone sealant.
3. Seal all wall cavities.

Termination and fittings

1. The air termination must be oriented at least 12 inches above grade or snow line as shown in FIG. 4-1.
2. Maintain the required dimensions of the finished termination piping as shown in FIG. 4-1.
3. Do not extend exposed vent pipe outside of the building more than what is shown in this document. Condensate could freeze and block vent pipe.
4. Stainless steel terminations are designed to penetrate walls with a thickness up to 9.25 inches of standard construction.

Multiple vent/air terminations

1. When terminating multiple Power-fin boilers terminate each vent/air connection as described in this manual (FIG. 4-4).

⚠ WARNING All vent pipes and air inlets must terminate at the same height to avoid possibility of severe personal injury, death, or substantial property damage.

4 Sidewall direct venting

2. Place wall penetrations to obtain minimum clearance of 12 inches (305 mm) between vent pipe and adjacent air inlet, as shown in FIG. 4-4 for U.S. installations. For Canadian installations, provide clearances required by CSA B149.1 Installation Code.

3. The air inlet of a Power-fin is part of a direct vent connection. It is not classified as a forced air intake with regard to spacing from adjacent boiler vents.

Figure 4-4 *Multiple Vent Terminations (must also comply with* ***Figure 4-1****)*

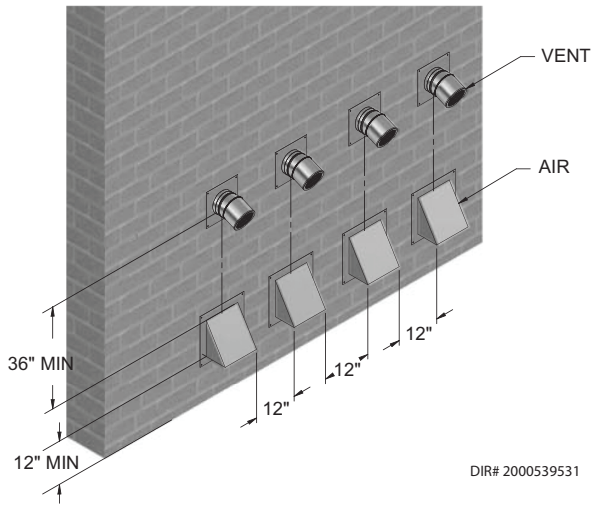

Figure 4-5 *Direct Vent Terminations*

DIRECT VENT TERMINATIONS			
Air Inlet		Vent Termination	
Dryer Inlet	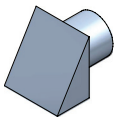	Straight	
90° Elbow		Mitered	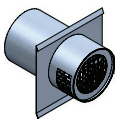
		23° Elbow	

Figure 4-6 *Room Air (Direct Exhaust Terminations)*

ROOM AIR (DIRECT EXHAUST TERMINATIONS)	
Vent Termination	
23° Elbow	
45° Elbow	
90° Elbow	

Room air

The Power-fin boiler may be installed with a single pipe carrying the flue products to the outside while using combustion air from the equipment room.

Follow the requirements in the General Venting, Sidewall Direct Venting, and Vertical Direct Venting sections for vent material specifications, vent length requirements, and vent termination requirements.

5 Water connections

Inlet and outlet connections

For ease of service, install unions on the inlet and outlet of the appliance. The connection to the appliance marked "Water Inlet" on the rear jacket should be used for return from the system. The connection on the header marked "Hot Water Outlet" is to be connected to the supply side of the system. Minimum water pipe connections to this appliance is 4 inch (101.6mm) pipe. See the piping requirements in the heating boiler section of this manual for multiple appliance installations.

***Figure 5-1**_Water Connections*

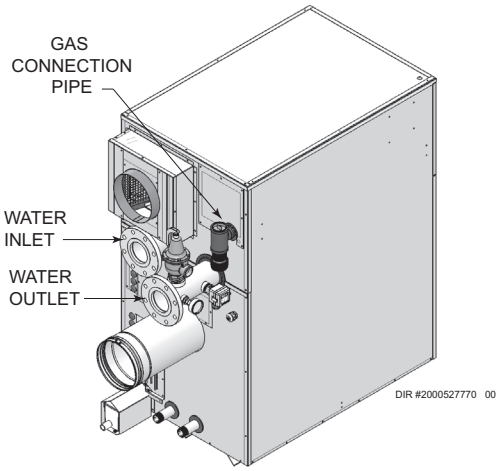

Heat exchanger

This appliance uses a finned copper tube heat exchanger to maximize the heat transfer process. The heat exchanger is mounted in the inner jacket on the front side of the appliance. The heat exchanger is composed of two circular, cast iron headers with 62 vertical finned copper tubes (FIG. 5-2) in two (2) concentric circles. A series of "V" shaped baffles are installed between the individual tubes to control the movement of the flue products over the finned copper surface and increase heat transfer. Water enters the heat exchanger and makes four passes over the area exposed to direct heat from the burner. A circulating pump MUST be installed to ensure proper water flow over the heat transfer surfaces during burner operation. Water temperatures in the heat exchanger are determined by water flow.

***Figure 5-2**_Heat Exchanger*

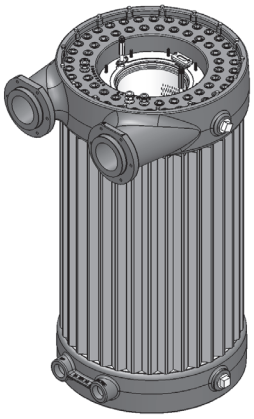

Initial set-up of maximum water flow

On initial start-up of the Power-fin, the maximum water flow to the heat exchanger must be checked and manually limited with a valve or bypass before normal operation begins.

Minimum water temperatures

A minimum return water temperature of 140°F (60°C) has been established to control condensate formation based on the Btu/hr output at rated burner input. Maintaining inlet water temperatures to the appliance equal to or higher than the specified minimum temperature ensures proper operation of the appliance and prevents condensate formation on the heat exchanger. An appliance allowed to sustain operation at water temperatures lower than the specified minimum temperature may not provide enough heat from the burner to maintain water temperature in the heat exchanger above the 140°F (60°C) dew point of flue products. Operation of the appliance at a temperature below the specified minimum set point will result in non-warrantable operational problems from the condensate formation on the primary heat exchanger (see the *Low Temperature Bypass Requirements* section of this manual).

⚠ CAUTION An appliance allowed to operate at return temperatures below the specified minimum setting may experience problems with the operating controls, safety switches, obstruction of the flue gas passages on the heat exchanger, incomplete combustion and possible flue gas spillage. Sustained operation at lower than specified water temperatures may cause hazardous conditions that may result in personal injury or non-warrantable damage to the appliance.

5 Water connections

Water flow switch

A water flow switch is factory installed in the outlet piping on all heating boilers. The flow switch must prove water flow before a trial for ignition can begin. The flow switch requires a minimum flow of 26 GPM to make the flow switch and start burner operation. A water flow switch meets most code requirements for a low water cutoff device on boilers requiring forced circulation for operation. A fault message, **Flow Sw/ LWCO** will be indicated in the Operator Interface on a low water flow condition as sensed by the flow switch.

Low water cutoff

If this boiler is installed above radiation level, a low water cutoff device must be installed at the time of boiler installation. An electronic low water cutoff is available as a factory supplied option on all models. The low water cutoff should be inspected every 6 months. A fault message, **Flow Sw/LWCO** will be indicated in the Operator Interface on a low water condition as sensed by the low water cutoff.

Relief valve

This unit is supplied with a relief valve(s) sized in accordance with ASME Boiler and Pressure Vessel Code, Section IV ("Heating Boilers"). The relief valve(s) is installed in the vertical position and mounted in the hot water outlet. No valve is to be placed between the relief valve and the unit. To prevent water damage, the discharge from the relief valve shall be piped to a suitable floor drain for disposal when relief occurs. No reducing couplings or other restrictions shall be installed in the discharge line. The discharge line shall allow complete drainage of the valve and line. Relief valves should be manually operated at least once a year.

⚠ CAUTION Avoid contact with hot discharge water.

Heating boiler installations

Piping of the boiler system

The drawings in this section show typical boiler piping installations, see FIG.'s 5-3 through 5-7. Before beginning the installation, consult local codes for specific plumbing requirements. The installation should provide unions and valves at the inlet and outlet of the boiler so it can be isolated for service. An air separation device must be supplied in the installation piping to eliminate trapped air in the system. Locate a system air vent at the highest point in the system. The system must also have a properly sized expansion tank installed. Typically, an air charged diaphragm-type expansion tank is used. The expansion tank must be installed close to the boiler and on the suction side of the system pump to ensure proper operation. A water meter to monitor makeup water is recommended. Makeup water volume should not exceed 5% of total system per year. Install a Y-strainer or equivalent multi-purpose strainer just before the boiler pump at the inlet of the heat exchanger. This item is used to remove system debris from older hydronic systems and to protect newer systems.

NOTICE *Please note that these illustrations are meant to show system piping concept only, the installer is responsible for all equipment and detailing required by local codes.

⚠ CAUTION The boiler system should not be operated at less than 12 PSIG. (Non-metallic system piping must have an oxygen barrier to be considered a closed loop.)

Hot water piping must be supported by suitable hangers or floor stands, **NOT** by the boiler. Copper pipe systems will be subject to considerable expansion and contraction. Rigid pipe hangers could allow the pipe to slide in the hanger resulting in noise transmitted into the system. Padding is recommended on rigid hangers installed with a copper system. The boiler pressure relief valve must be piped to a suitable floor drain. See the *Relief Valve* section on this page.

⚠ CAUTION A leak in a boiler "system" will cause the "system" to intake fresh water constantly, which will cause the tubes to accumulate a lime/scale build up. This will cause a non-warrantable failure.

Water connections

All boilers have four inch (4") ASME flanged iron pipe inlet and outlet connections. Installed piping to and from the boiler must be a minimum of 4 inches (4") in diameter.

⚠ CAUTION Field installed reducing bushings must not be used.

Any reduction in pipe size may decrease flow resulting in high water temperatures, boiler noise, flashing to steam, and non-warrantable heat exchanger damage.

Boiler circulator requirements

This is a low mass, high efficiency hot water boiler which must have adequate flow for quiet, efficient operation. Pump selection is critical to achieve proper operation. A pump should be selected to achieve proper system design water temperature rise. Pipe diameter and length are critical to ensure proper flow through the boiler. A System Temperature Rise Chart (Table 5B) is provided to assist in proper pump selection. This table provides GPM and boiler head-loss at various temperature rises for each model based on Btu/hr input. Temperature rise is the difference in boiler inlet temperature and boiler outlet temperature while the boiler is firing at full rate.

Example: The boiler inlet temperature is 145°F (63°C) and the boiler outlet temperature is 180°F (82.2°C). This means that there is a 35°F (2°C) temperature rise across the boiler. The boiler temperature rise is visible in the Operator Interface on the boiler's front control panel.

5 Water connections *(continued)*

Circulator pump specifications

1. Maximum operating pressure for the pump must exceed system operating pressure.
2. Maximum water temperature should not exceed the nameplate rating.
3. Cast iron circulators may be used for closed loop systems.
4. A properly sized expansion tank must be installed near the boiler and on the suction side of the pump.

Circulator pump operation

The boiler pump must run when the boiler is firing. Separate supply circuits can be provided or the two circuits (pump and controls) can be combined for connection to one circuit, properly sized for both.

Intermittent pump operation

An intermittent pump operation feature is provided. The boiler's circulating pump will cycle on at each call for heat, before the burner fires. The pump will continue to operate while the burner is firing. The pump will run for a minimum 30 second period after the temperature set point is satisfied. This timing is selectable from the Operator Interface. This timing will remove any of the residual heat from the combustion chamber before turning the pump off. See the wiring diagram in *Section 12* of this manual.

Pump Maintenance: Inspect the pump every six (6) months and oil as necessary. Use SAE 30 non-detergent oil or lubricant specified by the pump manufacturer.

The boiler is recommended for installation in a primary/secondary piping system. This type of system uses a separate boiler circulating pump to supply flow to and from the boiler only. The secondary pump is sized based on the head loss of the boiler and related pipe and fittings in the secondary loop only.

A properly sized primary system pump provides adequate flow to carry the heated boiler water to radiation, air over coils, etc. The fittings that connect the boiler to the primary system should be installed a maximum of 12 inches (0.30m) (or 4 pipe diameters) apart to ensure connection at a point of zero pressure drop in the primary system. There should be a minimum of 10 pipe diameters of straight pipe before and after the boiler secondary loop connections to prevent turbulent flow at the secondary loop connections. The secondary loop piping to and from the boiler must have a fully ported ball valve installed in both the supply and return side piping. The ball valves must be fully ported having the same inside diameter as the installed piping. The ball valve in the piping supplying water to the boiler will only be used as a service valve. The ball valve installed in the discharge from the boiler back to the primary system will be used to adjust boiler flow and temperature rise to ensure proper performance.

The boiler primary piping system must have a circulator installed in the main system loop to carry the heated boiler water to the point of use in the main system.

Multiple boilers may also be installed with a primary/secondary manifold system. Multiple boilers should be connected to the common manifold in reverse return to assist in balancing flow to multiple boilers.

The installer must ensure that the boiler has adequate flow without excessive temperature rise. Low system flow can result in overheating of the boiler water which can cause short burner cycles, system noise, relief valve discharge and in extreme cases, a knocking flash to steam. These conditions indicate the need to increase boiler flow to and from the boiler. This is generally accomplished by either increasing the size of the boiler pump or by increasing the diameter of the piping that connects the boiler to the primary system. A larger diameter pipe reduces head loss and increases flow.

⚠ CAUTION The Power-Fin is designed to function in a closed loop pressurized system not less than 12 PSI (83 kPa) (Non-metallic system piping must have an oxygen barrier to be considered a closed loop).

Low system water volume

System run time is very important to the overall operating efficiency of the boiler. Short cycling of the boiler creates problems with condensation in the vent stack, condensation on the heat exchanger, system temperature spikes, and mechanical component failures. To prevent short cycling of the boiler, it is important to limit the boiler cycles to six or fewer per hour.

A buffer tank is an effective way to enhance a small system load and increase heating system efficiency (see FIG. 5-7). Buffer tanks add water volume to the system and act as a flywheel to absorb the additional Btu's provided by the boiler when only a single zone of a large system is calling for heat.

To calculate the proper buffer tank size for a multiple zone system:

$$\frac{\textbf{(Run Cycle) (Output - Minimum System Load)}}{\textbf{(Temp. Rise) (8.33) (60 Min.)}}$$

PBN2500 (5:1 Turndown)

Min. Load = 125,000 Btu/Hr

Min. Boiler Output = 500,000 Btu/Hr

Cycle Time = 10 Min

Temp. Rise = 38

(10)(500,000 – 125,000) / (38)(8.33)(60) = 197 Gallons

5 Water connections

***Figure 5-3**_Primary/Secondary Piping of a Single Boiler*

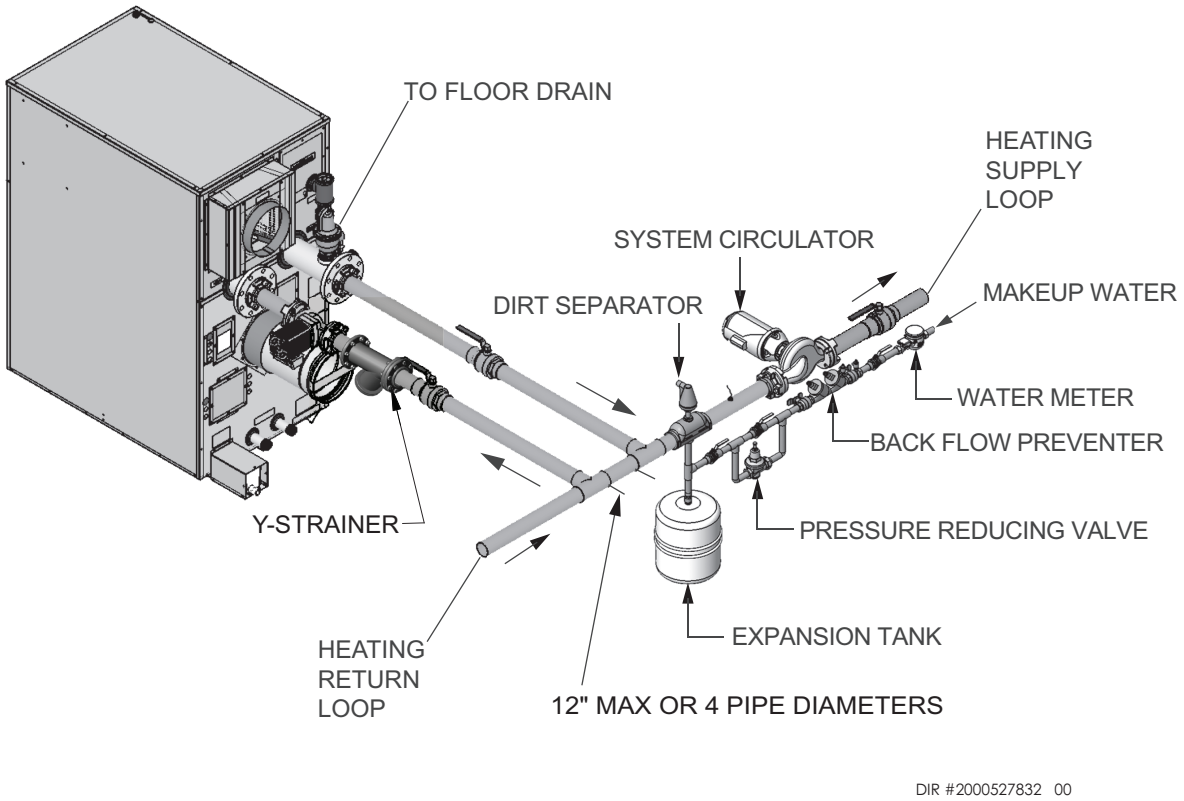

NOTICE *Please note that these illustrations are meant to show system piping concept only, the installer is responsible for all equipment and detailing required by local codes.

5 Water connections *(continued)*

***Figure 5-4**_Primary/Secondary Piping with DHW Normal*

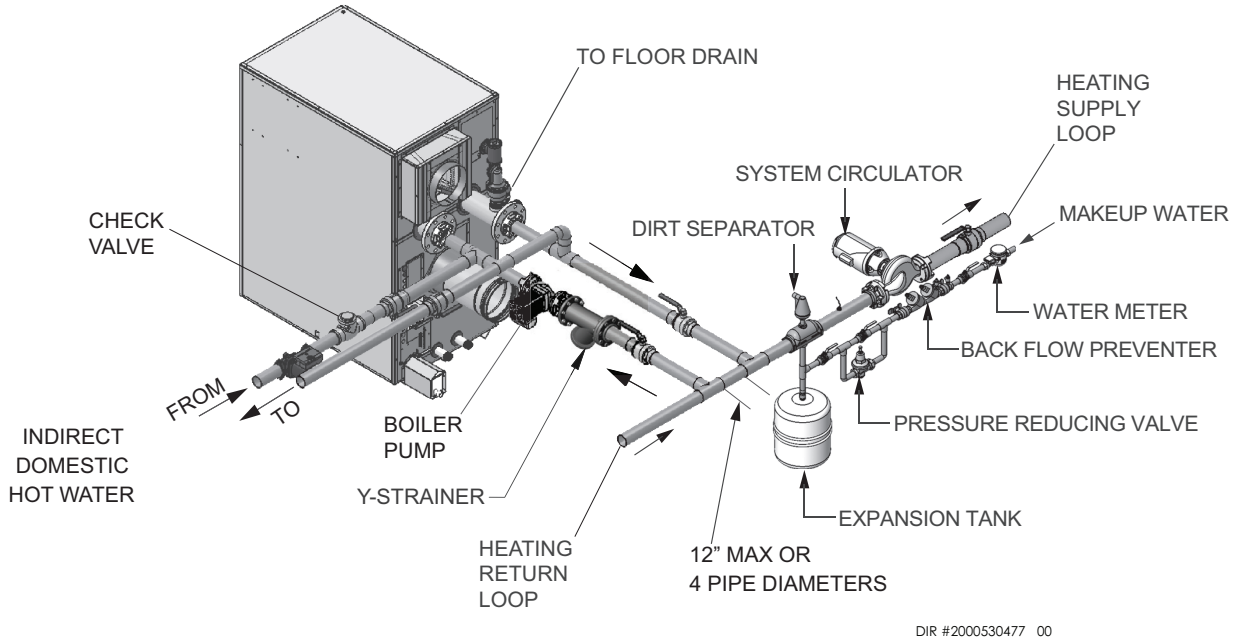

NOTICE *Please note that these illustrations are meant to show system piping concept only, the installer is responsible for all equipment and detailing required by local codes.

5 Water connections

***Figure 5-5**_Primary/Secondary Piping of Multiple Boilers*

COMMON MANIFOLD SIZE (Min.)							
Model	Number of Units						
	2	3	4	5	6	7	8
2500	6"	8"	8"	8"	10"	10"	12"
3000	6"	8"	8"	10"	10"	12"	12"
3500	8"	8"	9"	10"	10"	12"	12"
4000	8"	8"	9"	10"	12"	12"	14"
5000	8"	8"	9"	10"	12"	12"	14"

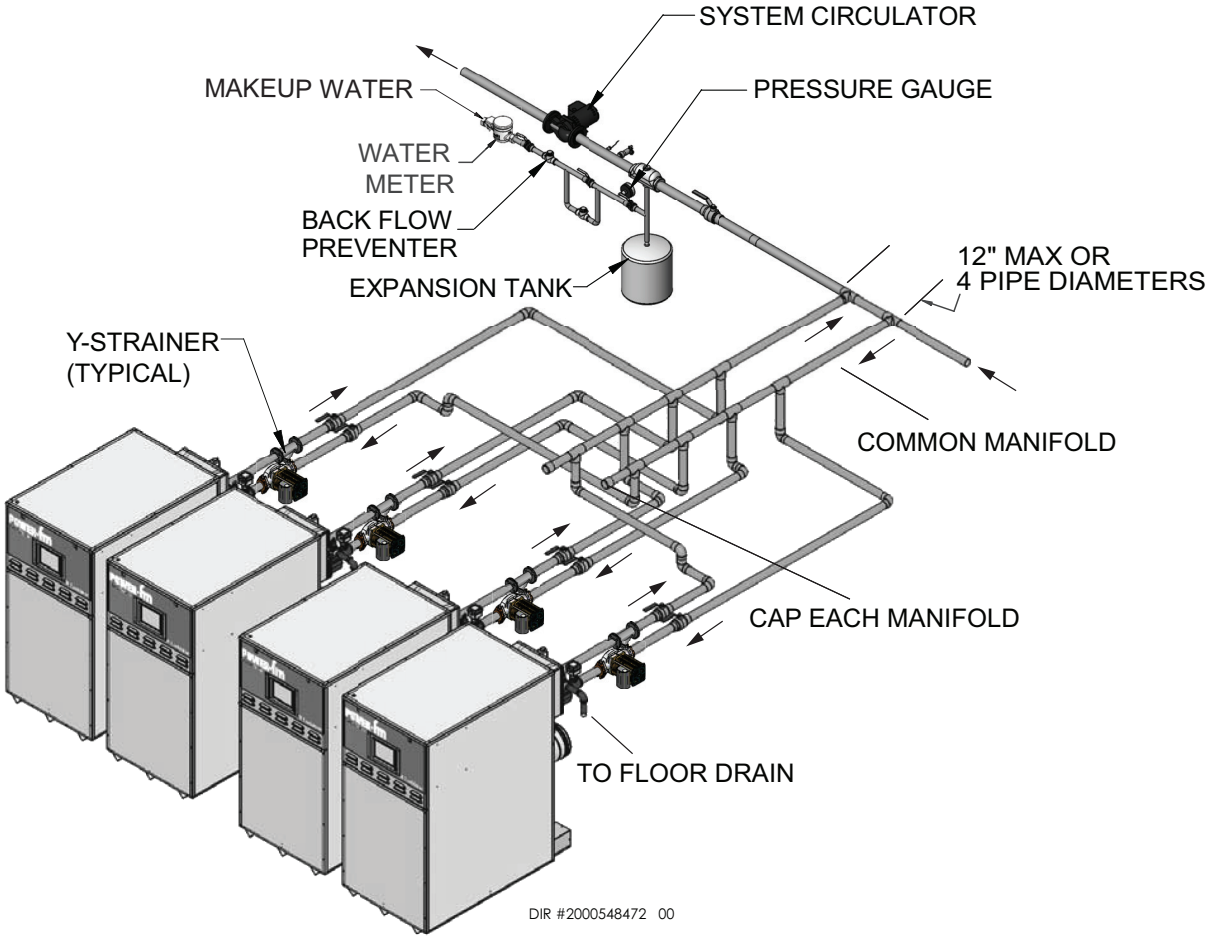

NOTICE *Please note that these illustrations are meant to show system piping concept only, the installer is responsible for all equipment and detailing required by local codes.

5 Water connections *(continued)*

***Figure 5-6**_Boiler with Low Temperature Bypass Piping - Using a Thermostatic Mixing Valve Required for Systems Operating at less than 140°F (60°C) Return Water Temperatures from the Heating Return Loop*

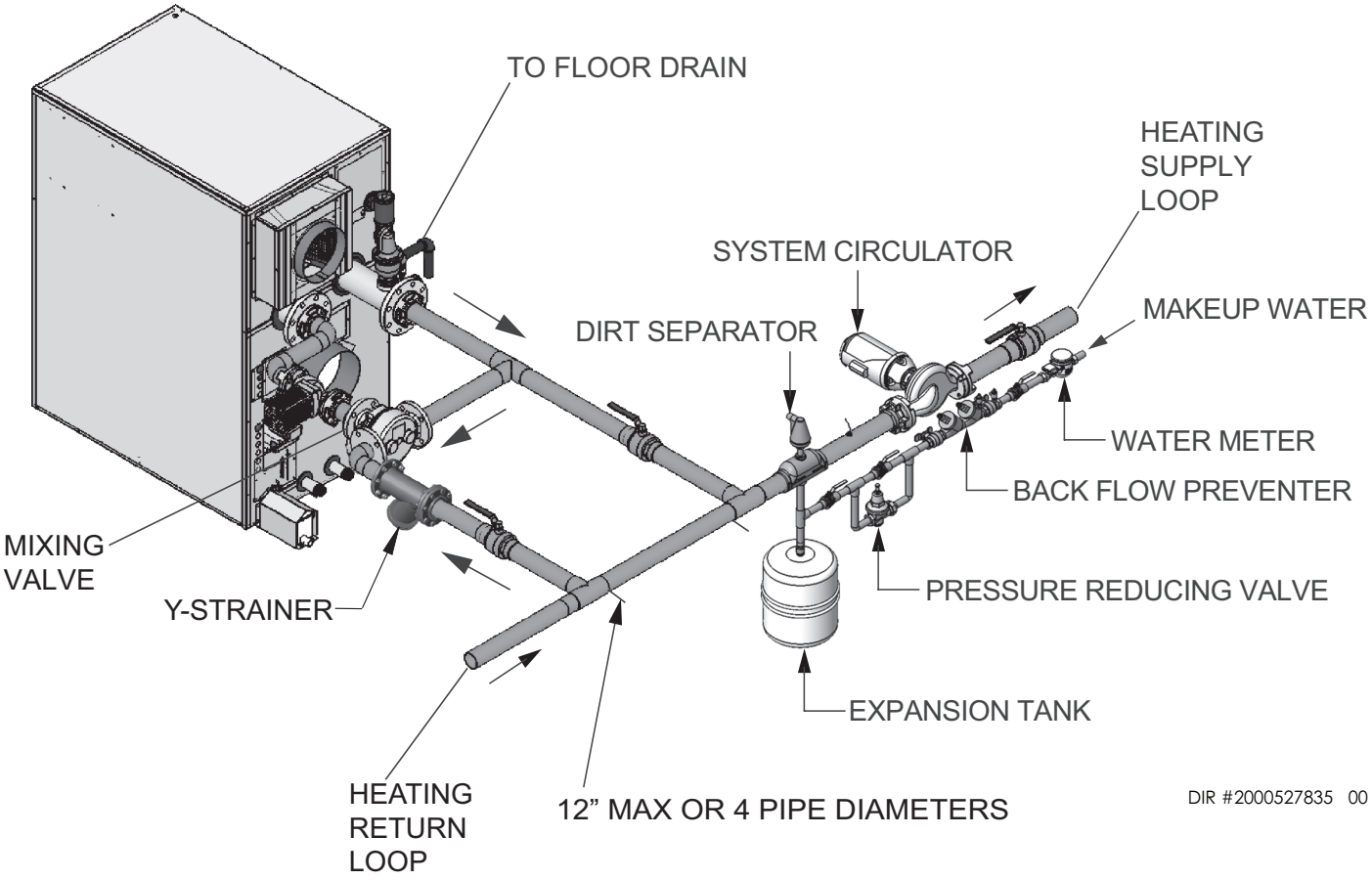

NOTICE *Please note that these illustrations are meant to show system piping concept only, the installer is responsible for all equipment and detailing required by local codes.

5 Water connections

***Figure 5-7**_Primary/Secondary Piping with Buffer Tank*

COMMON MANIFOLD SIZE (Min.)							
Model	Number of Units						
	2	3	4	5	6	7	8
2500	6"	8"	8"	8"	10"	10"	12"
3000	6"	8"	8"	10"	10"	12"	12"
3500	8"	8"	9"	10"	10"	12"	12"
4000	8"	8"	9"	10"	12"	12"	14"
5000	8"	8"	9"	10"	12"	12"	14"

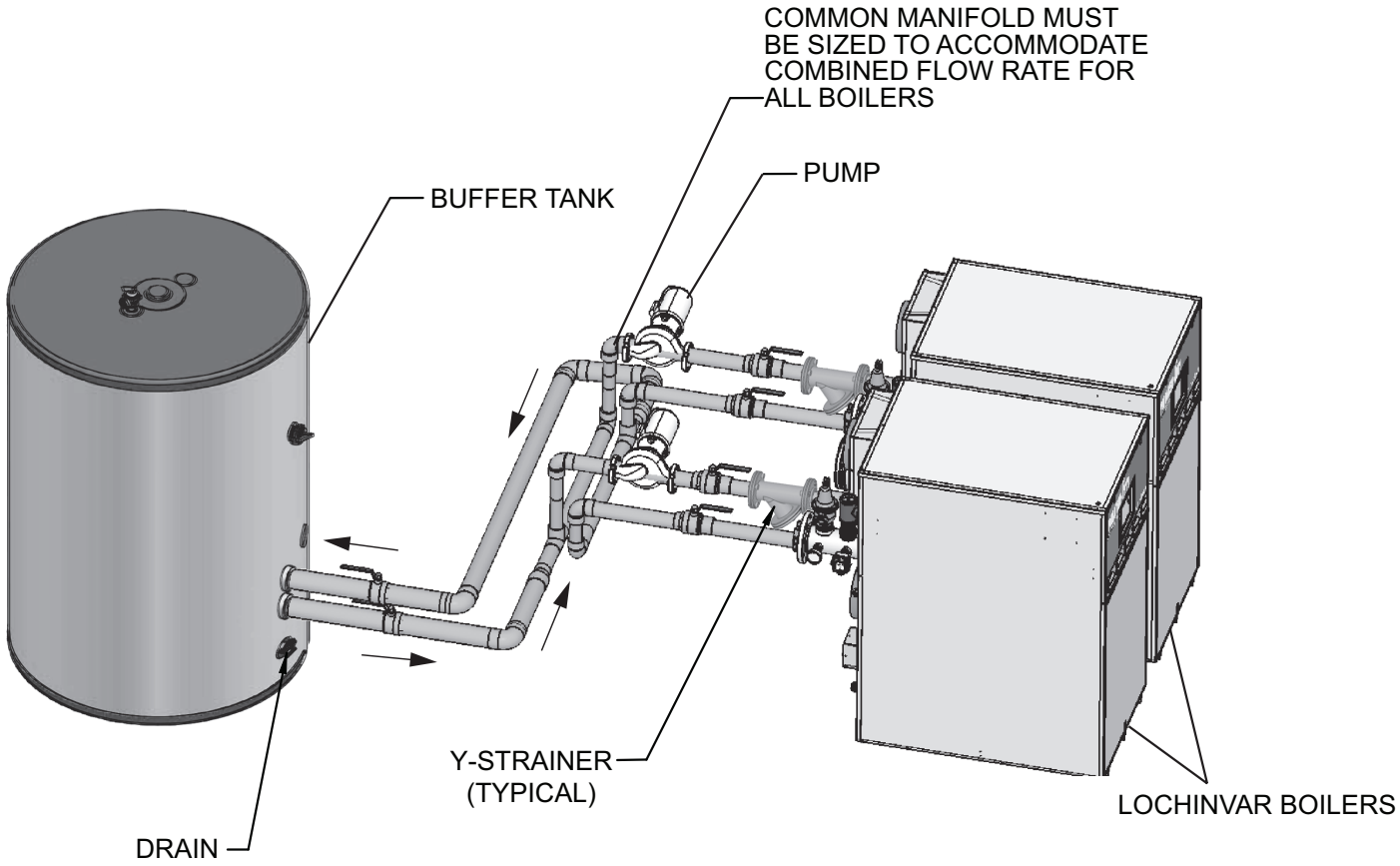

DIR #2000528785 00

NOTICE *Please note that these illustrations are meant to show system piping concept only, the installer is responsible for all equipment and detailing required by local codes.

NOTICE The Inlet/Outlet System tappings are shown in the optional location on the side of the tank for pictorial purposes. The standard location for the system tappings is 180° from the recirculation tappings.

5 Water connections *(continued)*

Minimum boiler water temperatures

Inlet water temperatures below the specified minimum of 140°F (60°C) can excessively cool the products of combustion resulting in condensation on the heat exchanger. Condensation on the heat exchanger can cause operational problems, bad combustion, sooting, flue gas spillage, and reduced service life of the related components. See the *Low Temperature Bypass Requirements* section for boiler system applications below the minimum specified temperature.

Low temperature bypass requirements

To prevent condensation problems, a boiler MUST NOT be operated (other than for brief periods during initial system start-up) with an inlet water temperature of less than 140°F (60°C). If normal system return temperatures are less than the required 140°F (60°C) boiler inlet requirement, a method of low return water temperature protection **MUST BE** provided to protect the boiler.

For Example: *Night Setback* of the system loop water temperature, *Night Shutdown* and *Weekend Shutdown* of the entire boiler / heating system, and Indoor / Outdoor Air Reset of the system loop water temperature. If any of these Building Management System control functions are being utilized on the hydronic heating system, some type of low return water protection **MUST BE** provided.

If the boiler heating system will be used on a Water Source Heat Pump System, Radiant Floor Heating System, Snow Melting Heating System, etc., some type of low return water protection must be provided.

Condensation can cause operational problems, bad combustion, sooting, flue gas spillage and reduced service life of the vent system and related components.

To prevent the system return water temperature below 140°F (60°C) from entering the boiler inlet, an electrically actuated 3-way mixing valve is available, consult manufacturer for kit availability (see FIG. 5-6). By using this valve, the SMART TOUCH control will bypass outlet water back into the inlet of the boiler to maintain the inlet temperature above 140°F (60°C).

A fast acting, self contained mixing valve, set to 140°F (60°C), may also be used. The installation of this valve must be done as shown in FIG. 5-6. This arrangement will maintain the required flow through the boiler.

When a mixing valve is used, an optional system return sensor should be installed into the system return piping. This will allow the display of the actual system return temperature, and will also allow control of the system return temperature when the SMART TOUCH control is programmed for inlet temperature control. As always, installation of the system supply sensor is strongly recommended as well. This will reduce the potential for short cycling of the boiler, and provide more responsive temperature regulation, even when the SMART TOUCH control is programmed for inlet temperature control.

⚠ CAUTION A boiler allowed to operate at set point temperatures below the specified minimum settings may experience operational problems with the operating controls and safety switches, obstruction of the flue gas passages on the heat exchanger, incomplete combustion and possible flue gas spillage. Operation at lower than specified water temperatures may cause hazardous conditions that result in non-warrantable damage to the appliance.

Three way valves in system

The installation of a three way valve on this boiler is not generally recommended because most piping methods allow the three way valve to vary flow to the boiler. This boiler is a low mass, high efficiency appliance which **requires a constant water flow rate for proper operation.** Low flow rates can result in overheating of the boiler water which can cause short burner cycles, system noise, relief valve discharge and in extreme cases, a knocking flash to steam. These conditions can cause operational problems and non-warrantable failures of the boiler.

Radiant floor and snow melt heating systems

This type of heating boiler application operates in a low temperature range which requires a boiler bypass as described under the *Low Temperature Bypass Requirements* section. A non-metallic rubber or plastic tubing installed in a radiant (in floor) system must have an oxygen barrier to prevent oxygen from entering the system through the walls of the installed tubing. Excessive oxygen absorption into the system will result in an accelerated rate of corrosion causing a sludge build-up. This excessive corrosion will also damage the boiler and system components. Sludge formed as the result of excessive oxygen in the system can restrict water flow resulting in a premature boiler failure. Any boiler damage due to excessive oxygenation is non-warrantable.

TABLE - 5A
MAXIMUM FLOW FOR HEATING BOILER

The maximum flow rate through the boiler with a copper heat exchanger must not exceed the following:

Model	Maximum Flow	Maximum Flow for CuNi Heat Exchanger
2500, 3000, 3500, 4000 and 5000	225 GPM	295 GPM

If higher flow rates are required through the boiler, an optional Cupro-Nickel heat exchanger is available. Consult the factory for specific application requirements.

5 Water connections

TABLE - 5B
SYSTEM TEMPERATURE RISE CHART
Temperature Rise and Head Loss Based on Boiler Output in Btu/hr

Btu/hr	20°F ΔT		25°F ΔT		30°F ΔT		35°F ΔT		40°F ΔT		45°F ΔT		50°F ΔT	
Input	GPM	Ft/hd	GPM	Ft/hd	GPM	Ft/hd	GPM	Ft/hd	GPM	Ft/hd	GPM	Ft/hd	GPM	Ft/hd
2,500,000	215.0	7.8	175.0	6.3	145.0	4.8	124.3	3.3	108.8	2.4	96.7	2.0	87.0	1.6
3,000,000	260.0*	14.0	210.0	11.9	174.0	9.8	149.1	6.9	130.5	4.6	116.0	3.6	104.4	2.9
3,500,000	N/A	N/A	245.0*	11.9	203.0	9.8	174.0	7.7	152.3	6.3	135.3	5.2	121.8	4.2
4,000,000	N/A	N/A	280.0*	18.0	232.0*	14.1	198.9	10.2	174.0	7.9	154.7	6.5	139.2	5.3
5,000,000	N/A	N/A	N/A	N/A	290.0*	20.2	248.6*	14.9	217.5	11.9	193.3	9.2	174.0	7.2

*Cupro-Nickel Heat Exchanger Required at Flows Above 225 GPM.

Boiler bypass requirements

The installer must ensure that the boiler is supplied with adequate flow without excessive temperature rise. It is recommended that this boiler be installed with a bypass in the piping if the maximum recommended flow rate is exceeded. The bypass will help to ensure that the boiler can be supplied with adequate water flow. Flow rates exceeding the maximum recommended flow will result in erosion of the boiler tubes. A typical bypass with a valve will allow control of boiler flow.

Temperature / pressure gauge

This boiler is equipped with a dial type temperature / pressure gauge. This gauge is factory installed in the outlet side of the boiler piping. The gauge has one scale to read system pressure and a separate scale to read water temperature in degrees Fahrenheit. The temperature / pressure gauge is provided to meet code requirements. Water temperatures can be more accurately monitored from the data provided in the digital display in the Operator Interface.

Typical heating boiler installations

General plumbing rules:

1. Check all local codes.
2. For serviceability of boiler, always install unions.
3. Always pipe pressure relief valve to an open drain.
4. Locate system air vents at highest point of system.
5. Expansion tank must be installed near the boiler and on the suction side of the system pump.
6. Support all water piping.

Installation with a chilled water system

Pipe refrigeration systems in parallel. Install duct coil downstream at cooling coil. Where the hot water heating boiler is connected to a heating coil located in the air handling units which may be exposed to refrigeration air circulation, the boiler piping system must be equipped with flow control valves or other automatic means to prevent gravity circulation of the boiler water during the cooling cycle.

The coil must be vented at the high point and hot water from the boiler must enter the coil at this point. Due to the fast heating capacity of the boiler, it is not necessary to provide a ductstat to delay circulator operation. Also, omit thermostat flow checks as the boiler is cold when heating thermostat is satisfied. This provides greater economy over maintaining standby heat.

6 Gas connections

Connecting gas supply piping

1. Refer to FIG. 6-1 to pipe gas to the boiler.
   a. Install ground joint union for servicing, when required.
   b. In Canada – When using manual main shutoff valves, it must be identified by the installer.

Figure 6-1 *Gas Supply Piping*

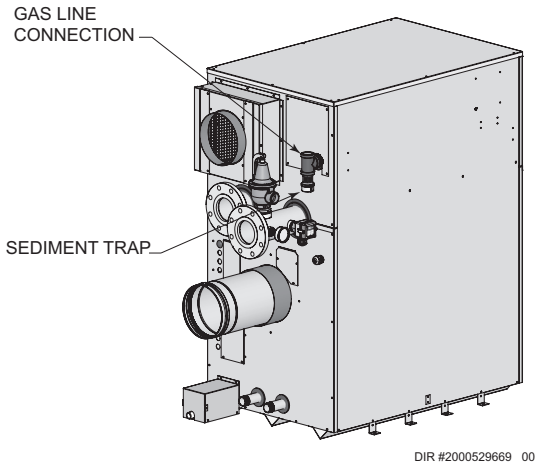

2. Support piping with hangers, not by the boiler or its accessories.

⚠WARNING The gas valve and blower will not support the weight of the piping. Do not attempt to support the weight of the piping with the boiler or its accessories. Failure to comply could result in severe personal injury, death, or substantial property damage.

3. Purge all air from the gas supply piping.
4. Before placing the boiler in operation, check the boiler and its gas connection for leaks.
   a. The appliance must be disconnected from the gas supply piping system during any pressure testing of that system at a test pressure in excess of 1/2 PSIG (3.5 kPa).
   b. The appliance must be isolated from the gas supply piping system by closing a manual shutoff valve during any pressure testing of the gas supply piping system at test pressures equal to or less than 1/2 PSIG (3.5 kPa).
   c. The appliance and its gas connection must be leak tested before placing it in operation.

⚠WARNING Do not check for gas leaks with an open flame – use the bubble test. Failure to use the bubble test or check for gas leaks can cause severe personal injury, death, or substantial property damage.

5. Use pipe sealing compound compatible with propane gases. Apply sparingly only to male threads of the pipe joints so that pipe dope does not block gas flow.

⚠WARNING Failure to apply pipe sealing compound as detailed in this manual can result in severe personal injury, death, or substantial property damage.

Table 6A *Gas Inlet Size*

Model	Gas Inlet Size
2500	2"
3000	2"
3500	2"
4000	2 1/2"
5000	2 1/2"

NOTICE Maximum inlet gas pressure must not exceed the value specified. Minimum value listed is for the purposes of input adjustment.

Natural gas:

⚠WARNING Check boiler rating plate to determine which fuel the boiler is set for. Power-fin boilers CANNOT be field converted. Failure to comply could result in severe personal injury, death, or substantial property damage.

Pipe sizing for natural gas

1. Refer to Table 6B for pipe length and diameter. Based on rated boiler input (divide by 1,000 to obtain cubic feet per hour).
   a. Table 6B is only for natural gas with specific gravity 0.60 inches, with a pressure drop through the gas piping of 0.3 inches w.c.
   b. For additional gas pipe sizing information, refer to the National Fuel Gas Code, NFPA 54 / ANSI Z223.1 - latest edition, or in Canada CSA B149.1 Installation Code.

Natural gas supply pressure requirements

1. Pressure required at the gas valve inlet pressure port:
   - Maximum 14 inches w.c. (3.5 kPa) with no flow (lockup) or with boiler on.
   - Minimum 4 inches w.c. (.99 kPa) with gas flowing (verify during boiler start-up).
2. Install 100% lockup gas pressure regulator in supply line if inlet pressure can exceed 14 inches w.c. (3.5 kPa) at any time. Adjust lockup regulator for 14 inches w.c. (3.5 kPa) maximum.

⚠WARNING Ensure that the high gas pressure regulator is at least 10 feet (3 m) upstream of the appliance.

6 Gas connections

Propane Gas:

⚠WARNING Check boiler rating plate to determine which fuel the boiler is set for. Power-fin boilers CAN NOT be field converted. Failure to comply could result in severe personal injury, death, or substantial property damage.

Pipe sizing for propane gas

1. Contact gas supplier to size pipes, tanks, and 100% lockup gas pressure regulator.

Propane Supply Pressure Requirements

1. Adjust propane supply regulator provided by the gas supplier for 14 inches w.c. (3.5 kPa) maximum pressure.
2. Pressure required at gas valve inlet pressure port:
   - Maximum 14 inches w.c. (3.5 kPa) with no flow (lockup) or with boiler on.
   - Minimum 8 inches w.c. (2.0 kPa) with gas flowing (verify during boiler start-up).

⚠WARNING Ensure that the high gas pressure regulator is at least 10 feet (3 m) upstream of the appliance.

Check inlet gas supply

⚠WARNING DO NOT adjust or attempt to measure gas valve outlet pressure. Attempting to alter or measure the gas valve outlet pressure could result in damage to the valve, causing potential severe personal injury, death, or substantial property damage.

The gas piping must be sized for the proper flow and length of pipe, to avoid excessive pressure drop. Both the gas meter and the gas regulator must be properly sized for the total gas load.

If you experience a pressure drop greater than 1 inch w.c. (249 Pa), the meter, regulator, or gas line is undersized or in need of service. Perform the steps below when checking inlet gas supply:

1. Turn the main power switch to the “OFF” position.
2. Shut off gas supply at the manual gas valve in the gas piping to the appliance.
3. Remove the 1/8" pipe plug on the inlet flange to the gas valve and install a suitable 1/8" fitting (field supplied) for the manometer tubing. Place the tubing of the manometer over the tap once the 1/8" fitting is installed as shown in FIG. 6-2.
4. Slowly turn on the gas supply at the factory supplied manual gas valve.
5. Turn the power switch to the “ON” position.
6. Adjust the temperature set point on the control panel of the SMART TOUCH control module to call for heat or utilize Service Mode, see the Start-up Section of this manual.
7. Observe the gas supply pressure as the burner fires at 100% of rated input. Percent of burner input will be displayed on the Modulation Screen.
8. Ensure inlet pressure is within specified range. Minimum and maximum gas supply pressures are specified in this section of the manual.
9. If gas supply pressure is within normal range and no adjustments are needed, proceed on to Step 11.
10. If the gas pressure is out of range, contact the gas utility, gas supplier, qualified installer or service agency to determine the necessary steps to provide proper gas pressure to the control.
11. Turn the power switch to the “OFF” position.
12. Shut off the gas supply at the manual gas valve in the gas piping to the appliance.
13. Remove the manometer from the pressure tap on top of the gas valve. Remove the 1/8" (3 mm) field supplied fitting and reinstall the pipe plug removed in Step 3.

⚠WARNING Do not check for gas leaks with an open flame -- use the bubble test. Failure to use the bubble test or check for gas leaks can cause severe personal injury, death, or substantial property damage.

14. Turn on the gas supply at the manual gas valve.
15. Turn the power switch to the “ON” position.
16. Adjust the temperature set point on the control panel of the SMART TOUCH control module to the desired water temperature so the appliance will call for heat.
17. Check burner performance by cycling the system while you observe burner response. The burner should ignite promptly. Flame pattern should be stable. Turn system off and allow burner to cool, then cycle burner again to ensure proper ignition and flame characteristics.

Figure 6-2 *Inlet Gas Supply Check*

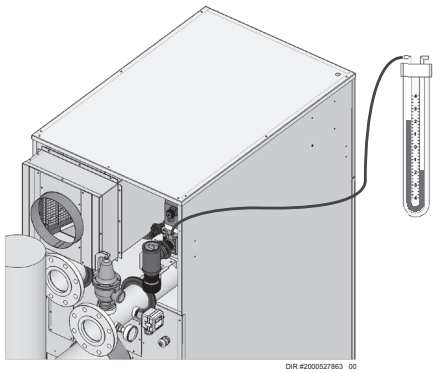

6 Gas connections *(continued)*

Table 6B *Natural Gas Pipe Size Chart*

TABLE - 6B Capacity of Schedule 40 Metallic Pipe in Cubic Feet of Natural Gas Per Hour (based on .60 specific gravity, 0.30" w.c. pressure drop)														
Pipe Size (Inches)	Length of Pipe in Straight Feet													
	10	20	30	40	50	60	70	80	90	100	125	150	175	200
2	3,050	2,090	1,680	1,440	1,280	1,160	1,060	989	928	877	777	704	648	602
2 1/2	4,860	3,340	2,680	2,290	2,030	1,840	1,690	1,580	1,480	1,400	1,240	1,120	1,030	960
3	8,580	5,900	4,740	4,050	3,590	3,260	3,000	2,790	2,610	2,470	2,190	1,980	1,820	1,700
4	17,500	12,000	9,660	8,270	7,330	6,640	6,110	5,680	5,330	5,040	4,460	4,050	3,720	3,460

Gas Pressure

The gas pressure must remain between 4 inches w.c. (.99 kPa) minimum and 14 inches w.c. (3.5 kPa)maximum for Natural gas and between 8 inches w.c. (2.0 kPa) minimum and 14 inches w.c. (3.5 kPa) maximum for LP gas during standby (static) mode and while in operating (dynamic) mode. If an in-line regulator is used, it must be a minimum of 10 feet (3 m) from the Power-fin boiler. It is very important that the gas line is properly purged by the gas supplier or utility company. Failure to properly purge the lines or improper line sizing, will result in ignition failure.

Ignition problems are especially noticeable in NEW LP installations and also in empty tank situations. This can also occur when a utility company shuts off service to an area to provide maintenance to their lines.

Gas valve replacement

The gas valve MUST NOT be replaced with a conventional gas valve under any circumstances. As an additional safety feature, the gas valves have flanged connections to the venturis and blowers.

⚠WARNING Failure to follow all precautions could result in fire, explosion, or death!

⚠WARNING DO NOT adjust or attempt to measure gas valve outlet pressure. Attempting to alter or measure the gas valve outlet pressure could result in damage to the valve causing potential severe personal injury, death, or substantial property damage.

7 Electrical connections

Boiler operating control module

The operating temperature control for the appliance is the SMART TOUCH control module. It is located on the inside of the control panel, behind the front access door. Access to adjust the temperature set point and other user adjustable points is made through the Operator Interface Smart Touch display. The outlet sensor is placed in a bulbwell installed in the outlet side of the heat exchanger top header. The inlet sensor is located in a bulbwell on the inlet side of the heat exchanger top header.

The operating sensor, inlet or outlet, is selectable from the screen in the Operator Interface.

The exact temperature set point is based on your system's requirements. Set the control set point(s) to the desired operating water temperature.

The maximum temperature set point that can be programmed into the standard control module from the Operator Interface on a heating boiler is 215°F (101.7°C). The manual reset high limit control for a heating boiler is adjustable up to a fixed maximum setting of 230°F (110°C).

The appliance, when installed, must be electrically grounded in accordance with the requirements of the authority having jurisdiction or in the absence of such requirements, with the latest edition of the National Electrical Code ANSI/NFPA No. 70. When the unit is installed in Canada, it must conform to the CAE C22.1, Canadian Electrical Code, Part I and/or local Electrical Codes. Multiple units connected in a Cascade must be grounded to the same ground connection.

1. All wiring between the appliance and field installed devices shall be made with type T wire [63°F (35°C) rise].
2. All line voltage wire exterior to the appliance must be enclosed in approved conduit or approved metal clad cable.
3. The circulating pump must run continuously when the appliance is being fired.
4. To avoid serious damage, DO NOT energize the appliance until the system is full of water. Ensure that all air is removed from the heat exchanger and piping before beginning initial operation. Serious damage may result if the appliance is operated without proper flow.
5. Provide the appliance with proper overload protection.

⚠ WARNING ELECTRICAL SHOCK HAZARD – For your safety, turn off electrical power supply before making any electrical connections to avoid possible electric shock hazard. Failure to do so can cause severe personal injury or death.

TABLE - 7A AMP DRAW DATA	
Model	**Amp Draw**
2500	4.9
3000	4.9
3500	6.0
4000	6.0
5000	3.4

NOTICE Wiring must be N.E.C. Class 1.

If original wiring as supplied with the boiler must be replaced, use only type 105°C wire or equivalent.

Boiler must be electrically grounded as required by National Electrical Code ANSI/NFPA 70 – latest edition.

⚠ CAUTION Label all wires prior to disconnection when servicing controls. Wiring errors can cause improper and dangerous operation.

Installation must comply with:

1. National Electrical Code and any other national, state, provincial, local codes, or regulations.
2. In Canada, CSA C22.1 Canadian Electrical Code Part 1, and any local codes.

Line voltage connections

1. Provide and install a fused disconnect or service switch sized per the boiler amp draw (shown on the boiler rating plate) as required by the code (see FIG.'s 7-1A thru 7-1C).
2. When connecting the boiler, system and hot water generator pumps connect the wiring to the line voltage terminal strip as shown in FIG.'s 7-1A thru 7-1C. Maximum current is 1.5 amps. Install a field supplied contactor between the pump(s) and the boiler connections.
3. For alternate voltages, consult factory.

TABLE - 7B SUPPLY VOLTAGE	
Model	**Supply Voltage**
2500 - 3000	240 VAC 1Φ
3500 - 4000	208 VAC 3Φ
5000	480 VAC 3Φ

7 Electrical connections *(continued)*

***Figure 7-1A**_Line Voltage Field Wiring Connections_ Models 2500 - 3000*

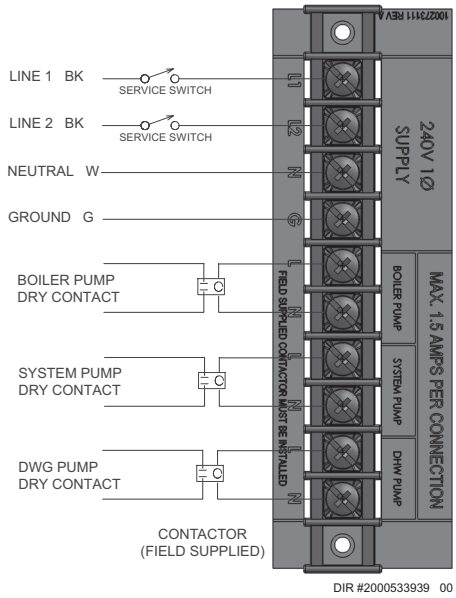

***Figure 7-1B**_Line Voltage Field Wiring Connections_ Models 3500 - 4000*

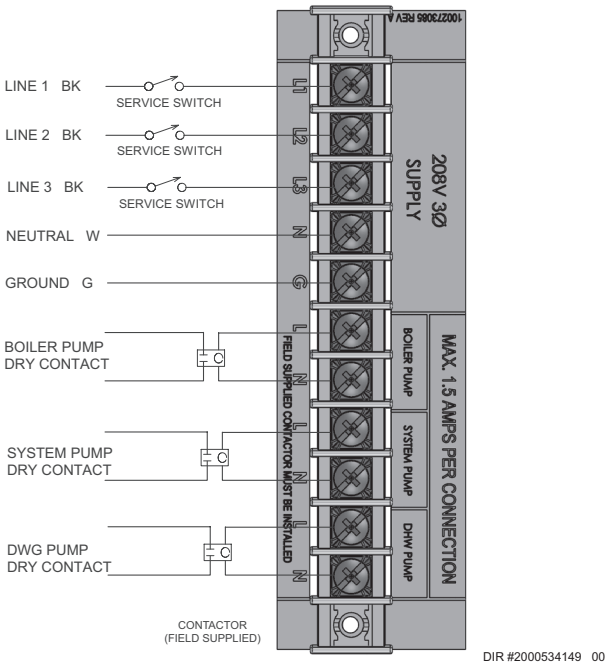

***Figure 7-1C**_Line Voltage Field Wiring Connections_ Model 5000*

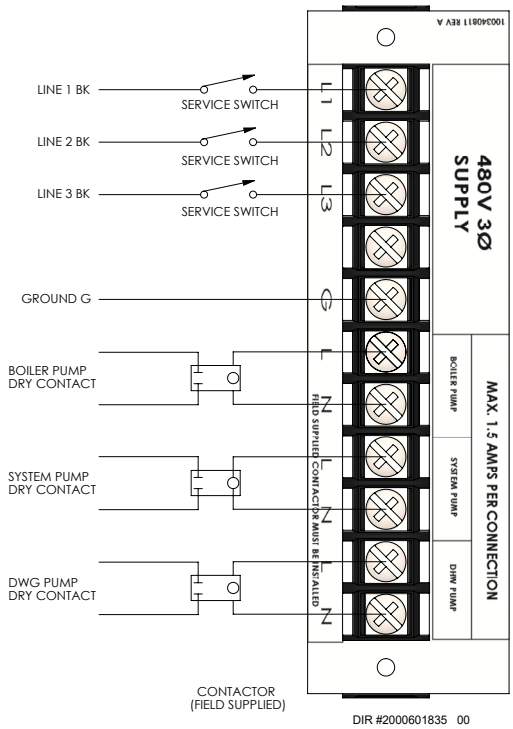

***Figure 7-2**_Routing Field Wiring*

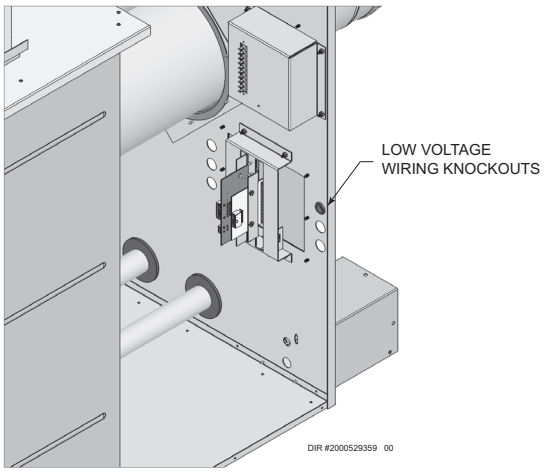

Low voltage connections

1. Route all low voltage wires through the knockouts in the rear of the heater, as shown in FIG. 7-2.
2. Connect low voltage wiring to the low voltage connection board as shown in FIG. 7-4 and the heater wiring diagram.

7 Electrical connections

EMS or remote thermostat connection

An EMS, remote thermostat or other remote temperature control may be connected to the boiler (see FIG. 7-3). Follow the manufacturer's instructions supplied with the remote temperature control for proper installation and adjustment. Connection of a set of dry switching contacts or a remote on/off thermostat to the low voltage connection board will allow the unit to be switched on and off by making or breaking a 24 VAC control circuit. Remove the factory jumper between the enable terminals on the low voltage connection board and connect the remote temperature control in its place, see FIG. 7-4.

Ensure that all wiring used to connect the switching contacts of the remote temperature controller to the connection board are a minimum of 18 gauge and have a maximum installed length of 300 feet (91.4m). Set the SMART TOUCH control to a set point temperature slightly higher than the setting of the remote temperature control. This will ensure that the remote temperature controller functions as the operating control for the heater.

Figure 7-3_Remote ON/OFF Wire Connection

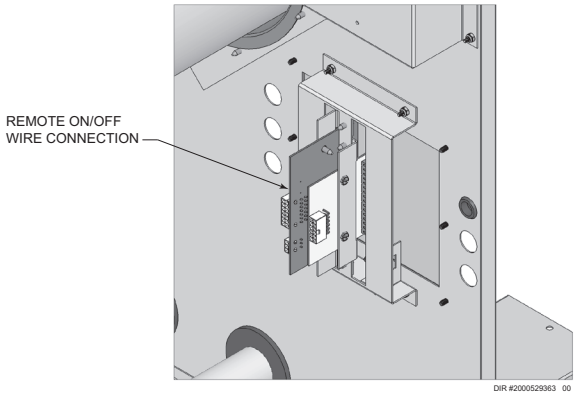

Louver proving switch

1. When the operation of a louver proving switch needs to be verified before the boiler fires, remove the jumper wire from these terminals and connect them to the normally open contacts on its proving switch (FIG. 7-4).

System supply sensor

1. By installing the system supply sensor into the supply of the primary loop, the temperature of the primary supply can be controlled. The SMART TOUCH control automatically detects the presence of this sensor, and controls the boiler firing rate to maintain the system supply temperature to the set point (if the outlet sensor control is currently selected).

2. Connect these terminals to the system supply sensor (FIG. 7-4).

System return sensor

1. By installing the system return sensor into the return of the primary loop, the temperature of the primary return can be sensed when a 3-way valve or other device is installed ahead of the heater inlet. The SMART TOUCH control automatically senses the presence of this sensor. If the inlet sensor is selected as the controlling sensor, the SMART TOUCH control will adjust the firing rate to hold the system return temperature to the set point. It is strongly recommended that the system supply sensor be installed as well.

2. Connect these terminals to the system return sensor (FIG. 7-4).

Boiler Management System (BMS)

1. An external control may be connected to control either the firing rate or the set point of the appliance. Connect the 0 - 10 VDC terminals to the 0 - 10 VDC output of the external control. The SMART TOUCH control can be programmed to use the enable output of the Boiler Management System, or use the voltage signal to enable the heater. Connect the enable terminals to the enable output of the BMS, when used.

2. Make sure the ground terminal is connected to the ground output terminal of the external control, and the 0 - 10 VDC terminal is connected to the 0 - 10 VDC terminal of the external control.

Runtime contacts

The SMART TOUCH control closes a set of dry contacts whenever the burner is running. This is typically used by Building Management Systems to verify that the boiler is responding to a call for heat.

Alarm contacts

The SMART TOUCH control closes another set of contacts whenever the heater is locked out or the power is turned off. This can be used to turn on an alarm, or signal a Building Management System that the boiler is down.

7 Electrical connections *(continued)*

Wiring of the cascade

When wiring the heaters for Cascade operation, select one heater as the Leader heater. The remaining heaters will be designated as Members. See the Configuration of the Cascade Section for a detailed explanation of this procedure.

On boilers, connect the system supply sensor and outdoor air sensor (if used) to the Leader boiler. The location of the system supply sensor should be downstream of the boiler connections in the main system loop (FIG.'s 5-3 and 5-7). The system supply sensor should be wired to the low voltage connection board at the terminals marked for the system supply sensor (see FIG. 7-4). The Leader control will use the water temperature at the system supply sensor to control the operation of the Cascade.

If outdoor air reset is desired, the outdoor air sensor should be wired to the low voltage connection board at the terminals marked for the outdoor air sensor (FIG. 7-4). If the outdoor air sensor is connected, the Leader control will calculate the water temperature set point based on the programmed reset curve parameters. If the outdoor air sensor is not connected, the Leader control will maintain the space heating (SH) set point that is programmed into the control.

If a Thermostat, Zone Control enable output, or Building Management System enable output are available, it should be wired to the low voltage connection board on the Leader boiler at the enable terminals. If the boilers are to run continuously, leave the jumper wire between the enable terminals. This will initiate a call for heat on the Cascade. Also, leave the jumpers on the enable terminals of all the Member heaters. This will allow them to run independently should the Leader heater fail.

Communication between the Leader heater and the Member heaters is accomplished by using shielded, 2-wire twisted pair communication cable. Connect one of the twisted pair wires to terminal A on each of the low voltage connection boards, and the other wire of the twisted pair to terminal B on each of the low voltage connection boards. Connect the shield wire to the shield ground terminal on all of the heaters. If more than two heaters are on the Cascade, daisy chain the wiring from the Cascade terminals on the second heater to the Cascade terminals on the third heater, then from the third to the forth, and so on. The connections can be made in any order, regardless of the addresses of the heaters. Try to keep each cable as short as possible.

When the Member 1 boiler is programmed as an Alternate Leader, this allows the Member 1 boiler to automatically assume control of the Cascade should it lose communication with the Leader boiler. When programmed to YES, it is recommended that the Member 1 boiler have its own set of external sensors installed (such as the system supply sensor) to maintain the same level of temperature control as with the Leader boiler. Voltage signals (such as 0-10V system pump speed input) can be connected to both boilers.

7 Electrical connections

Figure 7-4_*Low Voltage Field Wiring Connections*

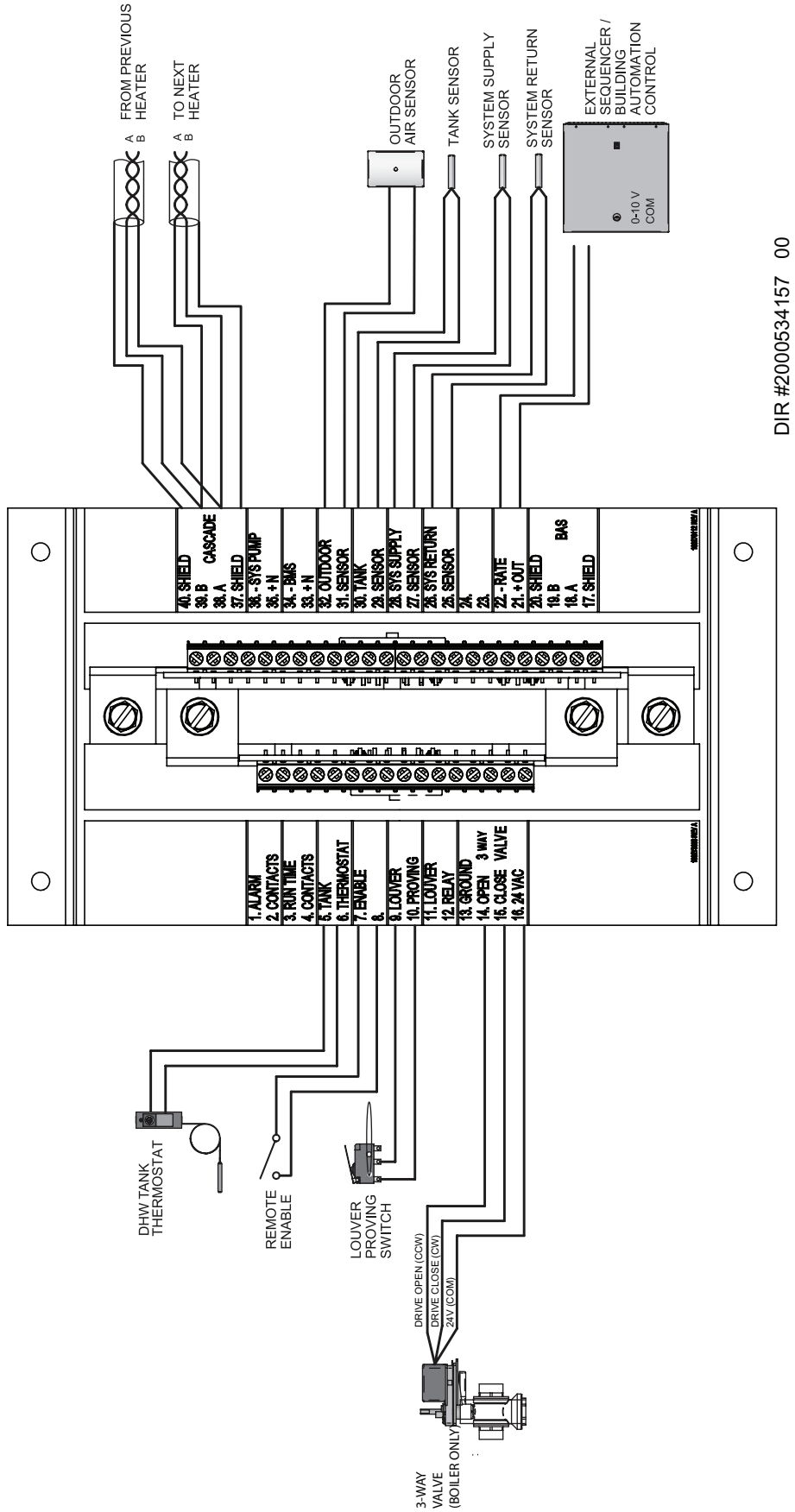

8 Condensate disposal

Condensate trap installation

1. Locate the condensate trap kit shipped loose with the appliance. The kit includes a sheet metal mounting base, two (2) nuts and the condensate trap.

2. Install the condensate trap mounting base on the rear of the appliance in the lower left-hand corner as depicted in FIG. 8-1. Use the pre-drilled holes on the appliance to secure the mounting base to the appliance.

3. Secure the condensate trap to the base using the two (2) nuts supplied with the kit. The trap should be oriented so that the barb connections are pointing toward the appliance (FIG. 8-1).

4. Use a level to ensure that the condensate trap is level on its base. Failure to keep the condensate trap level can result in the spillage of flue products from the condensate trap.

5. Locate the two hoses exiting the back of the appliance. Attach the larger hose on the appliance to the lower barb connection on the condensate trap. Secure the hose to the barb with a field supplied hose clamp (FIG. 8-1).

6. Attach the smaller hose on the unit to the upper barb connection on the condensate trap. Secure the hose to the barb connection with a field supplied hose clamp (FIG. 8-1).

7. Route the 3-pin wiring harness from the condensate trap to the matching connector on the lower back of the appliance as shown in FIG. 8-1. This is the blocked drain safety switch. This switch will shut the appliance off if the condensate trap becomes too full of liquid.

8. Remove the four (4) screws securing the top cover to the condensate trap and remove the cover (FIG. 8-1).

9. Locate the plastic ball inside the float tube. Verify there is nothing under the ball causing it to not seat properly (FIG. 8-1).

10. Replace the cover.

11. Replace the four (4) screws removed in Step 8.

12. A 1/2" pipe connection is supplied on the condensate trap. Connect a suitable pipe or tube to this connection (see FIG. 8-1).

Figure 8-1_Install Condensate Trap

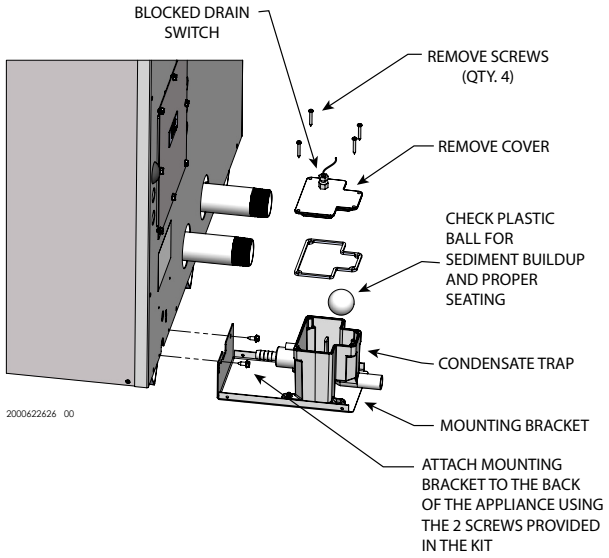

⚠WARNING Use a level to ensure that the condensate trap is level on its base. Failure to keep the condensate trap level can result in the spillage of flue products from the condensate trap.

Failure to follow this warning could result in product damage or improper operation, personal injury, or death.

NOTICE Use materials approved by the authority having jurisdiction. In the absence of other authority, PVC and CPVC pipe must comply with ASTM D1785 or D2845. Cement and primer must comply with ASME D2564 or F493. For Canada use CSA or ULC certified PVC or CPVC pipe, fittings, and cement.

13. Slope the condensate line down and away from the appliance into a drain or condensate neutralizing filter. Do not expose the condensate line to freezing temperatures.

NOTICE The condensate line must remain unobstructed, allowing free flow of condensate. If condensate is allowed to freeze in the line or if the line is obstructed in any other manner, the blocked drain safety switch will prevent the appliance from firing.

9 Start-up

Pre-Commissioning Cleaning

1. Prior to fill and start-up, flush the entire heating system.
2. Clean the entire heating system with an approved pre-commissioning cleaner (comparable to Sentinel X300 and Fernox F3) in accordance with the manufacturer's recommendation to remove debris and prolong the life of the heat exchanger.
3. Clean all water filtering devices in the system.
4. Flush the cleaning solution out of the entire system and refill.

Fill water

Check/control fill water chemistry

IMPORTANT Conduct water quality testing prior to installing the appliance. Various solutions are available to adjust water quality.

The manufacturer recommends the following for properly filling your boiler with the appropriate water chemistry for closed loop boilers. Good fill water quality will help extend the life of the appliance by reducing the effects of lime scale buildup and corrosion in closed loop systems.

Hardness between 5 and 15 grains per gallon

1. Consult local water treatment companies for hard water areas (above 15 grains per gallon hardness).
2. Hardness levels that are above 15 grains/gallon can lead to lime scale buildup throughout the boiler system. If the fill water is below 5 grains/gallons, usually due to use of a water softener, it is recommended to mix in some potable water at the inlet to increase the hardness of the water to above 5 grains/gallons.

pH between 6.5 and 8.5

1. pH levels below 6.5 can cause an increase in the rate of corrosion. pH of 8.5 or higher can potentially cause lime scale buildup.

Total Dissolved Solids (TDS) less than 350 ppm

1. Total dissolved solids are all minerals, salts, metals, and charged particles that are dissolved in water.
2. The greater the amounts of TDS present, the higher the corrosion potential due to increased conductivity in the water.

Chloride concentration less than 150 ppm

1. Do not fill boiler or operate with water containing chlorine in excess of 150 ppm.
2. Filling with fresh drinking water should be acceptable.
3. Do not use the boiler to directly heat swimming pool or spa water.

Boiler water

CAUTION Do not use petroleum based cleaning or sealing compounds in the boiler system. Gaskets and seals in the system may be damaged. This can result in substantial property damage.

CAUTION DO NOT use "homemade cures" or "boiler patent medicines". Serious damage to boiler, personnel, and/or property may result.

Table 9A Boiler Water Chemistry

BOILER WATER CHEMISTRY	
Specification	**Range**
Dissolved Solids	< 2000 ppm
pH Level	6.5 to 9.5
Chloride	< 150 ppm

- Monitoring pH, chlorides, TDS, and hardness levels can prolong the life of the appliance by reducing lime scale buildup, corrosion, and erosion. Check for leaks to ensure that fresh water is not entering the system.
- Continual fresh makeup water will reduce boiler life.
- Mineral buildup in the heat exchanger reduces heat transfer, overheats the stainless steel heat exchanger, and causes failure.
- The addition of oxygen carried in by makeup water can cause internal corrosion in system components.
- Leaks in the boiler or piping must be repaired at once to prevent excessive makeup water. For this purpose, it is recommended to install a water meter to easily check the amount of makeup water entering the system. Makeup water volume should not exceed 5% of the total system volume per year. NOTE: When makeup water is added, make sure the chemical additives are added to maintain the correct level.
- An approved multi-metal corrosion inhibitor (comparable to Sentinel X100 or Fernox F1) is recommended at the correct concentration and in the manner recommended by the manufacturer.

Freeze protection

⚠WARNING Ethylene glycol is toxic, DO NOT use as your freeze protection. Ethylene glycol has a sweet aroma which children and pets could mistake as food and ingest; leading to death.

1. Use glycol only if needed for freeze protection.
2. Propylene glycol is the recommended freeze protection.
3. Make sure to flush the boiler system before adding glycol.
4. Determine the freeze protection fluid quantity using system water content, following the fluid manufacturer's instructions. Boiler water content is listed in the Ratings Section. Remember to include expansion tank water content.

9 Start-up *(continued)*

5. Local codes may require a backflow preventer or actual disconnect from city water supply.

6. When using freeze protection fluid with automatic fill, it is suggested to install a water meter to monitor water makeup. Freeze protection fluid may leak before the water begins to leak, causing the concentration to drop, which reduces the freeze protection level.

7. The freeze protection set points may be lowered when freeze protection fluid is used (see the Power-Fin Service Manual).

8. Consult the glycol manufacturer for details on the suggested mix of glycol and water for the desired freeze protection level and the de-rate effect it will have on the boiler output.

Test / replace freeze protection fluid

1. For systems using freeze protection fluids, follow the fluid manufacturer's instructions.

2. Freeze protection fluid must be replaced periodically due to degradation of inhibitors over time.

3. It is recommended to test the glycol concentration annually and adjust within the desired set points.

Oxygen prevention

CAUTION Eliminate all system leaks. Continual fresh makeup water will reduce boiler life. Minerals can build up in the heat exchanger, reducing heat transfer, overheating the heat exchanger, and causing heat exchanger failure.

Dissolved oxygen can have a negative effect on the boiler system. Oxygen can cause iron oxide to generate iron deposits. Oxygen may also increase the rate of corrosion on non-stainless steel parts of the system. A low pH level combined with oxygen further enhances its corrosive effects. After boiler installation, check for air leaks in the following areas:

- Suction gasket
- Pump
- Air valve
- O-ring gaskets

Precautions include installing a water meter to evaluate the fresh water volume entering the system (should be no more than 5% system volume). Additional volumes of fresh water could indicate that a leak is present.

Fill and test water system

1. Fill system only after ensuring the water meets the requirements of this manual.

2. Close automatic and manual air vents and boiler drain valve.

3. Fill to correct system pressure. Correct pressure will vary with each application.
   a. The minimum cold water fill pressure for a system is 12 PSI.
   b. Pressure will rise when the boiler is turned ON and system water temperature increases.

4. At initial fill and during boiler start-up and testing, check the system thoroughly for any leaks. Repair all leaks before proceeding further.

Purge air from water system

1. Purge air from system:
   a. Connect a hose to the purge valve (see purge/drain valve in the piping diagrams, FIG. 5-3 to FIG. 5-7). Route the hose to an area where water can drain and be seen.
   b. Close the boiler or system isolation valve between the purge valve and fill connection to the system.
   c. Close zone isolation valves.
   d. Open the quick-fill valve on the cold water makeup line.
   e. Open purge valve.
   f. Open the isolation valves one zone at a time. Allow water to run through the zone, pushing out the air. Run until no noticeable air flow is present. Close the zone isolation valves and proceed with the next zone. Follow this procedure until all zones are purged.
   g. Close the quick-fill water valve and purge valve and remove the hose. Open all isolation valves. Watch that system pressure rises to correct cold-fill pressure.
   h. After the system has operated for a while, eliminate any residual air by using the manual air vents located throughout the system.
   i. If purge valves are not installed in the system, open the manual air vents in the system one at a time, beginning with the lowest floor. Close the vent when water squirts out. Repeat with remaining vents.

2. Open the automatic air vent (diaphragm-type or bladder type expansion tank systems only) one turn.

3. Open other vents:
   a. Starting on the lowest floor, open air vents one at a time until water squirts out.
   b. Repeat with remaining vents.

4. Refill to correct pressure.

9 Start-up

Check for gas leaks

⚠WARNING Before starting the boiler, and during initial operation, smell near the floor and around the boiler for gas odorant or any unusual odor. Remove the front access panel and smell the interior of the boiler enclosure. Do not proceed with start-up if there is any indication of a gas leak. Use an approved leak detection solution. Repair any leaks at once.

⚠WARNING Propane boilers only – Your propane supplier mixes an odorant with the propane to make its presence detectable. In some instances, the odorant can fade, and the gas may no longer have an odor. Before start-up (and periodically thereafter), have the propane supplier verify the correct odorant level in the gas.

Check thermostat circuit(s)

1. Disconnect the two external wires connected to the enable terminals on the connection board.
2. Connect a voltmeter across these two incoming wires. Close each thermostat, zone valve, and relay in the external circuit one at a time and check the voltmeter reading across the incoming wires.
3. There should NEVER be a voltage reading.
4. If a voltage does occur under any condition, check and correct the external wiring. (This is a common problem when using 3-wire zone valves.)
5. Once the external thermostat circuit wiring is checked and corrected if necessary, reconnect the external thermostat circuit wires to the connection board. Allow the boiler to cycle.

Inspect/fill condensate system

Inspect/check condensate lines and fittings

1. Inspect the condensate drain line, condensate PVC fittings and condensate trap.

Fill condensate trap with water

1. Remove the four (4) screws securing the top cover to the condensate trap and remove the cover (FIG. 9-1).
2. Locate the plastic ball inside the float tube. Verify there is nothing under the ball causing it to not seat properly.
3. Replace the cover.
5. Replace the four (4) screws removed in Step 1.

Figure 9-1_Condensate Trap

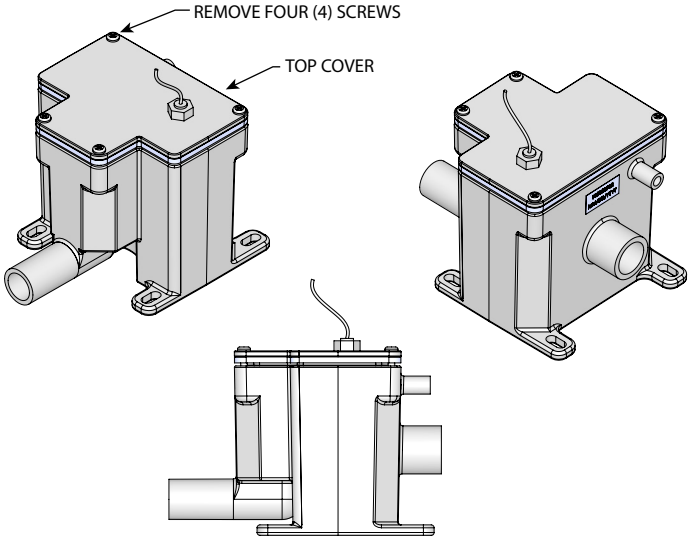

2000622601 00

Check vent and air piping

1. Inspect vent piping and air piping for signs of deterioration from corrosion, physical damage or sagging. Verify air piping and vent piping are intact and correctly installed per this manual.

Placing the boiler in operation

Boiler operational checks

2. Turn the boiler main power switch to the "ON" position.
3. Verify operation of the SMART TOUCH control module and Operator Interface.
4. Program the adjustable points from the Operator Interface.
5. Push the reset for the low water cutoff (if equipped).
6. Ensure that maximum flow to the boiler does not exceed 225 GPM. Verify by checking temperature rise while burner is firing at 100% of rated input.
7. Install a manometer on the gas supply to the boiler and verify minimum gas supply pressure as the burner fires at 100% of rated input.
8. Verify operation of safeties as necessary (low water cutoff, high limit, gas pressure, etc.,).
9. Verify that all adjustable points in the Operator Interface are set as required.

9 Start-up *(continued)*

Final checks before starting the boiler

- ❑ Read the Power-fin Service Manual to familiarize yourself with SMART TOUCH control module operation. Read Section 9 - Start-up for proper steps to start boiler.
- ❑ Verify the boiler and system are full of water and all system components are correctly set for operation.
- ❑ Verify the preparation procedures of Section 9 have been completed.
- ❑ Verify electrical connections are correct and securely attached.
- ❑ Inspect vent piping and air piping for signs of deterioration from corrosion, physical damage or sagging. Verify air piping and vent piping are intact and correctly installed per this manual.

Start the boiler

1. Read and follow the Operating instructions in FIG. 9-2.

If boiler does not start correctly

1. Check for loose connections, blown fuse or service switch off?
2. Is external limit control (if used) open? Is boiler water temperature above 200°F (93°C)?
3. Is the boiler receiving a call for heat?
4. Is gas turned on at meter and boiler?
5. Is incoming gas pressure less than 4 inches w.c. (.99 kPa)?

If none of the above corrects the problem, refer to the Troubleshooting Section of the Power-fin Service Manual.

Check system and boiler

❑ Check water piping

1. Check system piping for leaks. If found, shut down the boiler and repair immediately. (See WARNINGS in this section regarding failure to repair leaks.)
2. Vent any remaining air from the system using manual vents. Air in the system will interfere with circulation and cause heat distribution problems and noise.

❑ Check vent piping and air piping

1. Check for gastight seal at every connection, seam of air piping, and vent piping.

⚠ WARNING Venting system must be sealed gastight to prevent flue gas spillage and carbon monoxide emissions, which will result in severe personal injury or death.

❑ Check gas piping

1. Check around the boiler for gas odor following the procedure in the Connecting Gas Supply Piping Section of this manual.

⚠ WARNING If you discover evidence of any gas leak, shut down the boiler at once. Find the leak source with a bubble test and repair immediately. Do not start the boiler again until corrected. Failure to comply could result in severe personal injury, death, or substantial property damage.

Check flame and combustion

1. Turn the main power off to the boiler by placing the "On/Off" switch in the OFF position.
2. Remove the flue temperature sensor from the flue collector. **Note:** Combustion measurements will be made at this point.
3. Insert the probe from a combustion analyzer into the hole left by the removal of the flue temperature sensor.
4. Turn the main power on to the boiler by placing the "On/Off" switch in the ON position.
5. Navigate to the Setup Screen from the Home Screen by pressing the SETUP button along the left side of the screen. Enter the installer password.
6. Select the Service Maintenance Screen. The tabs will scroll (up and down) to reveal more options. See the Power-Fin Service Manual for more detailed information.
7. Once the heat exchanger has modulated up to rate, measure the combustion. The values should be in the range listed in *Table 9A* of the Power-fin Service Manual. CO levels should be less than 200 ppm for a properly installed unit. If the combustion is not within range reference the *Troubleshooting* Section in the Power-fin Service Manual for possible causes and corrective actions.
8. Once the heater analysis is complete, test the safety shutoff device by turning the manual shutoff valve to the OFF position and ensuring that the heater shuts down and registers an alarm. Open the manual shutoff valve and reset the control.

9 Start-up

***Figure 9-2**_Operating Instructions*

FOR YOUR SAFETY READ BEFORE OPERATING

WARNING: If you do not follow these instructions exactly, a fire or explosion may result causing property damage, personal injury, or loss of life.

A. This appliance does not have a pilot. It is equipped with an ignition device which automatically lights the burner. Do not try to light the burner by hand.

B. BEFORE OPERATING smell all around the appliance area for gas. Be sure to smell next to the floor because some gas is heavier than air and will settle on the floor.

WHAT TO DO IF YOU SMELL GAS

- Do not try to light any appliance.
- Do not touch any electric switch; do not use any phone in your building.
- Immediately call your gas supplier from a neighbor's phone. Follow the gas supplier's instructions.
- If you cannot reach your gas supplier, call the fire department.

C. Use only your hand to turn the gas control knob. Never use tools. If the handle will not turn by hand, don't try to repair it, call a qualified service technician. Force or attempted repair may result in a fire or explosion.

D. Do not use this appliance if any part has been under water. Immediately call a qualified service technician to inspect the appliance and to replace any part of the control system and any gas control which has been under water.

OPERATING INSTRUCTIONS

1. **STOP!** Read the safety information above on this label.
2. Set the thermostat to lowest setting.
3. Turn off all electric power to the appliance.
4. This appliance is equipped with an ignition device which automatically lights the burner. Do not try to light the burner by hand.
5. Remove front door.
6. Turn gas shutoff valve counterclockwise to "OFF". Handle will be perpendicular to pipe. Do not force.
7. Wait five (5) minutes to clear out any gas. If you then smell gas, **STOP!** Follow "B" in the safety information above this label. If you don't smell gas, go to next step.
8. Turn gas shutoff valve clockwise to "ON". Handle will be parallel to pipe.
9. Install front door.
10. Turn on all electric power to appliance.
11. Set thermostat to desired setting.
12. If the appliance will not operate, follow the instructions "To Turn Off Gas To Appliance" and call your service technician or gas supplier.

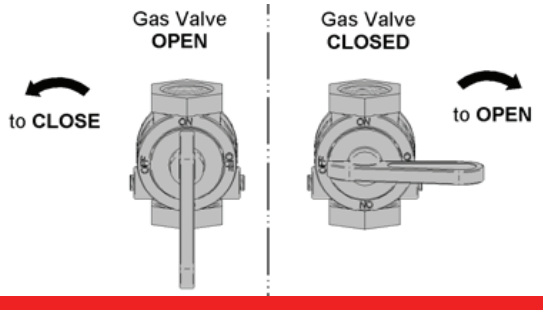

TO TURN OFF GAS TO APPLIANCE

1. Set the thermostat to lowest setting.
2. Turn off all electric power to the appliance if service is to be performed.
3. Remove front door.
4. Turn gas shut off valve counterclockwise to "OFF". Handle will be perpendicular to pipe. Do not force.
5. Install front door.

LBL20053 REV B

9 Start-up *(continued)*

Set space heating operation

Verify space heat circulator mode

The system pump output can be programmed to never run (OFF), run only when a space heating demand is present (ON), or run continuously except during warm weather shutdown (WWSD). If the boiler is not heating an indirect HW (Hot Water Generator) tank, it also turns on the boiler pump. After the space heating call for heat ends, and the system pump is programmed as ON, the system pump continues to run for a short period of time. If the boiler pump was running, it continues to run for a short period of time as well. These pump delays are factory set to 30 seconds. If different delays are desired, the appropriate parameters in the control must be changed. See the Power-fin Service Manual for a detailed explanation of this procedure.

Set space heating set point temperature

During normal operation, set point temperatures can be adjusted from the Home Screen by pressing the DETAILS button on the bottom of the screen (see FIG. 9-4).

1. To change a set point, use the set point slider feature or the PLUS (+) and MINUS (-) buttons to adjust the set points as shown in FIG. 9-4.
2. Once the set point has been adjusted to the desired setting, press the Door Menu slider (top left) or the Setup button.
3. Press the APPLY CHANGES button on the top of the screen.

NOTE: The APPLY CHANGES button must be pressed to complete programming of the controls. Failure to press the APPLY CHANGES button will result in an unprogrammed control. The Door Menu button will become highlighted when there are changes that can be applied.

Figure 9-4 *User Set Point Screen*

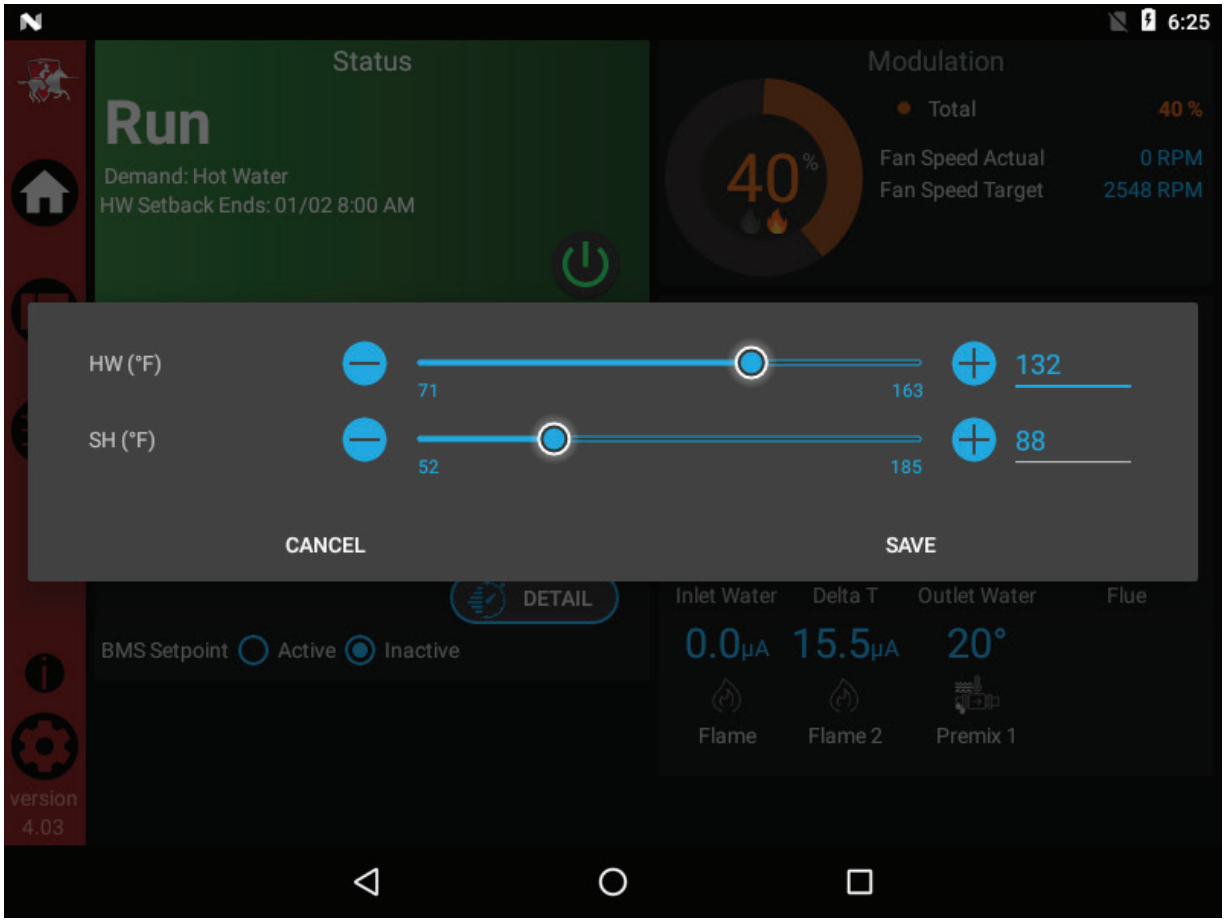

10 Operating information

Set Hot Water Generator (HW) operation

Note: For more detailed instructions, please refer to the Power-fin Service Manual.

Verify HW mode

There are two (2) modes of operation for HW. In Normal Mode, when a HW demand begins, the control will start the HW pump, turn off the boiler pump (if running), and modulate to bring the outlet temperature to the HW boiler set point. The maximum firing rate may be limited in this mode if desired.

In Zone Mode it is assumed that the indirect HW tank is piped as a zone on the primary loop. When a HW demand begins, the control will turn on the HW pump output, and raise the system temperature set point to the HW boiler set point (if higher). The boiler pump will be turned on. The system pump may be forced on, forced off, or not changed, depending on the System Pump Mode selected (reference the Power-fin Service Manual for details). In this mode, any low temperature zones (such as radiant heating) may need additional controls to limit the water temperature sent to those zones.

Set HW boiler target temperature

When in the HW Mode, the control will modulate to maintain the boiler outlet temperature or system supply temperature to a set point. This set point is set at the factory to 180°F. If a different set point is desired, the appropriate parameter in the control must be changed. See the Power-fin Service Manual for a detailed explanation of this procedure.

Set maximum HW fan speed

If the rated input of the indirect tank is less than the maximum output of the boiler, change the maximum HW fan speed setting to limit the boiler output accordingly, see the Power-fin Service Manual for a detailed explanation of this procedure.

Set clock

The SMART TOUCH control has a built-in clock that it uses for its night setback feature and for logging events. This clock must be set when the appliance is installed and anytime the appliance has been powered off for more than one day. Use the following procedure to set the clock:

1. Press the SETTINGS button under the Lochinvar logo (see FIG. 10-1).
2. Press the SET button across from the date and time.
3. Proceed to set the date, time, and time zone. **NOTE:** Automatic Time Zone will not work.
4. Temperature units and WiFi may also be set here. These items may be used to automatically sync the time.
5. Press the Home, View, or Back button to exit.

Figure 10-1 *Settings*

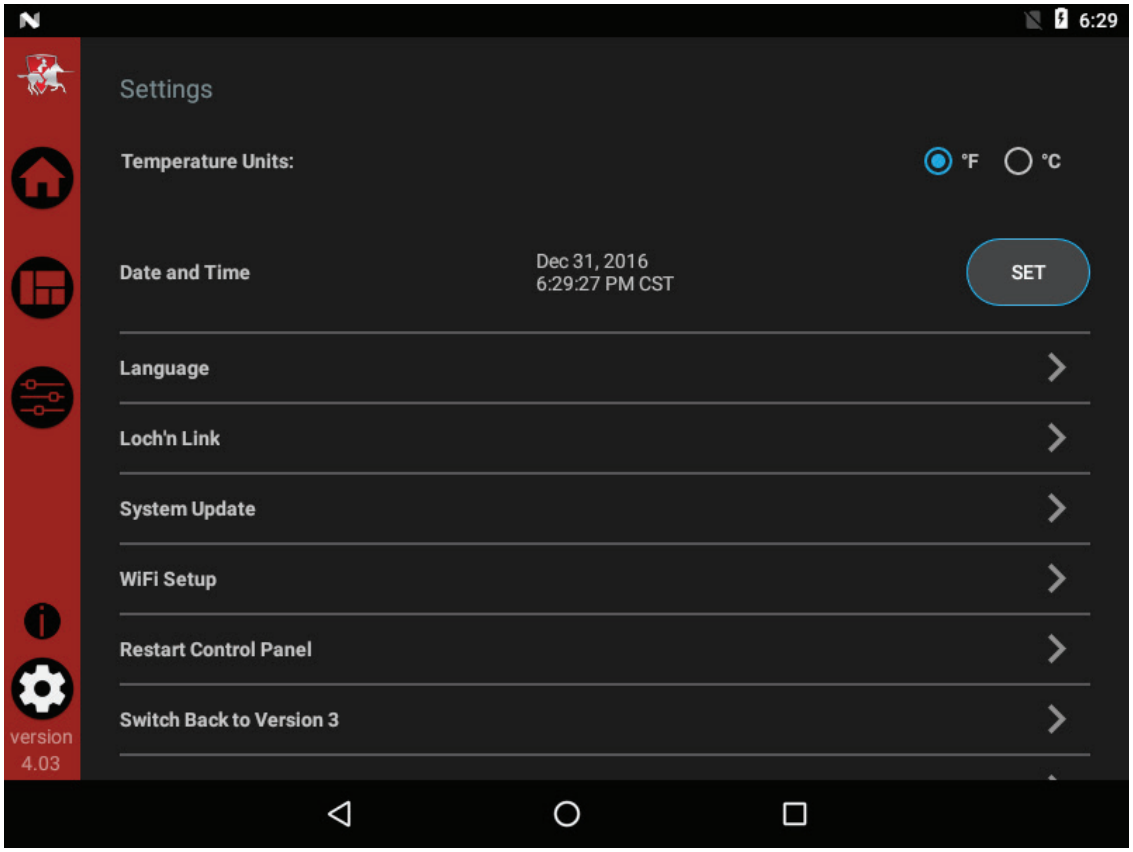

10 Operating information *(continued)*

Configuration of the cascade

NOTE: For more detailed instructions, please refer to the Power-Fin Service Manual.

When installing a Cascade system, all units must be programmed for Cascade to operate. Access the Cascade Setup options as follows:

1. Press the SETUP button on the left side of the display screen.
2. Enter the installer password.
3. Select the Cascade option as shown in FIG. 10-2.
4. Each unit must have a unique address set. The leader has more options which are described in the Power-Fin Service Manual.
5. Once all the updates are complete, press the Door Menu slider (top left) or the Setup button.
6. Press the APPLY CHANGES button on the top of the screen.

NOTE: The APPLY CHANGES button must be pressed to complete programming of the controls. Failure to press the APPLY CHANGES button will result in an unprogrammed control. The Door Menu button will become highlighted when there are changes that can be applied.

Figure 10-2 *Cascade Screen*

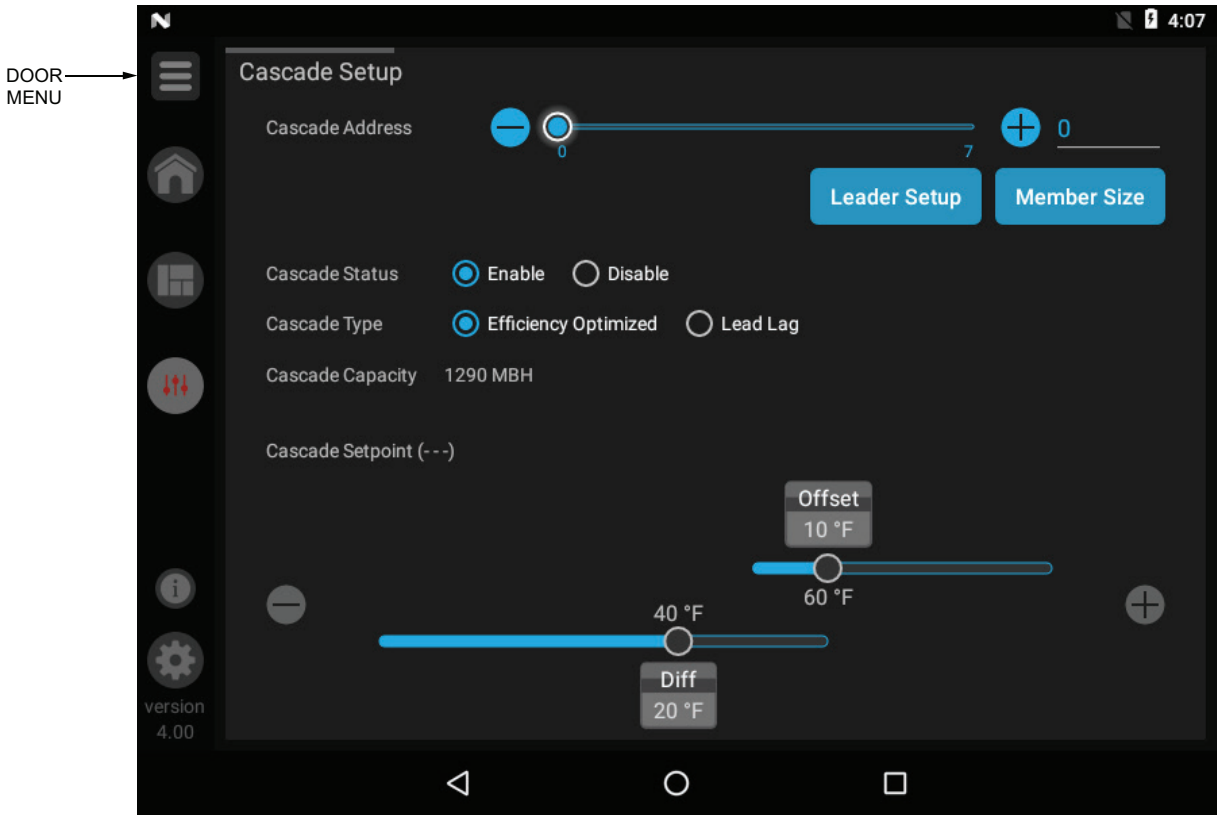

10 Operating information

General

How the appliance operates

The Power-fin uses a copper finned tube heat exchanger to transfer heat from the flue products to the water. An electronic control module monitors various inputs to initiate a call for heat. The blower provides air to the burner and forces the flue products out of the combustion chamber and into the vent system. The control module regulates the blower speed to control the firing rate of the unit. The modulating gas valve monitors the amount of combustion air being pulled into the blower and regulates the amount of gas supplied, which then mixes with the combustion air and is supplied to the burner.

How the control modules operate

The Power-fin boiler is equipped with a SMART TOUCH control module. The SMART TOUCH control module receives inputs from boiler sensors and external devices. The control module activates and controls the blowers and gas valves to regulate heat input and switches the boiler, Hot Water Generator (HW), and system pumps on and off as needed. The user programs the control module to meet system needs by adjusting control parameters. These parameters set operating temperatures and boiler operating modes.

Control inputs and outputs

Enable

This input tells the boiler to provide water for space heating.

Hot Water Generator (HW) tank thermostat

This input tells the boiler to provide water for heating an indirect HW tank.

0 - 10V BMS input (set point or power)

The Power-fin can be controlled by a Building Management System (BMS) using a 0 - 10 VDC signal. The control can be configured by the installer to use this signal to either control set point or firing rate.

0 - 10V System Pump speed input

When a variable speed system pump is used, and there is a 0 - 10V signal available from the pump speed control, this signal may be connected to the boiler. Doing so will allow the boiler to anticipate changes in the BTU's needed by the system as the system flow changes, and therefore, help the boiler to maintain the desired system temperature. Connect the - input terminal to the COM or - output terminal on the pump speed control, and the + input terminal to the 0 - 10V or + output terminal on the pump speed control. Note that the voltage on these inputs must never go below ground.

HW priority

The SMART TOUCH control allows the connection of a HW thermostat or tank sensor to the low voltage connection board. When a tank sensor is connected, the HW thermostat input is ignored. When a boiler is programmed for HW Normal Mode, the maximum firing rate can be limited to match the input rating of the indirect tank coil.

HW / space heating (SH) cycling

If a HW call for heat is received while a space heating call is in progress, and the HW is in Normal Mode, the control will start the HW pump and shut the boiler pump off. The system pump will remain on. For stand-alone boilers, if the space heating call is still active while the HW call is in operation, the control will wait for 30 minutes (time adjustable by installer) then it will switch back to the space heating demand. There is a timer to switch from space heating to HW and a timer to switch from HW to space heating. The control will switch back and forth until one of the heat demands end. This function does not apply to cascade systems.

Controlling sensor

The control module is programmed to use the outlet sensor as the control sensor by default. If a system supply sensor is connected, the control automatically uses it as the control sensor. The control module may be programmed to use the inlet sensor as the control sensor instead. In this case, the control will use the system return sensor if it is connected.

Anti-cycling

After a space heating demand has been satisfied, the control will delay the next space heating call for a set time period (time is adjustable by the installer). The time delay will be bypassed if the inlet water temperature drops too far during the delay.

Boiler, system, and HW pump control

When a space heating call for heat starts and no HW call is on, the boiler pump is turned on. The system pump will turn on also if it is programmed to do so. If a HW call for heat is on, the boiler pump will wait to turn on until just before the HW pump turns off. After the space heating call for heat ends, the boiler pump will run for an additional period of time.

When a HW call for heat starts, the HW pump is turned on. If a space heating call for heat is on, the boiler pump will turn off a few seconds after the HW pump turns on.

Louver

When the boiler needs to control combustion air louvers, connect a 24 VAC louver relay to the two (2) Louver Relay terminals. Connect the Louver End Switch to the Louver Proving Switch input on the Low Voltage Connection Board.

Temperature control

Modulation

The Power-fin is capable of modulating its firing rate from a minimum of 20% to a maximum of 100%. The firing rate is dictated by the call for heat (i.e., space heating or hot water generation), the heating load, ramp delay (if enabled), and various other temperature limitations.

10 Operating information *(continued)*

Gradient limiting

If during operation of the boiler the outlet water temperature is rising too quickly, the control will reduce the firing rate to its lowest setting.

Outdoor air reset

If an outdoor air sensor is connected, the control module will calculate the set point based on the programmed reset curve. The installer can change the slope of the reset curve by several adjustable parameters. The user can limit the maximum set point for the system using the space heating set point.

Boost function

If outdoor air reset is active, the boost temperature is not 0, a space heating demand has been active continuously for a set period of time (time adjustable by installer) and there has been no HW demands, the control will increase the set point by a fixed number of degrees (adjustable by installer). This process will continue until the space heating demand ends, the set point reaches the programmed set point or a maximum of 20 increases has occurred. Once the system heat demand is satisfied, the set point will revert to the value determined by the reset curve.

Night setback

The controller may be programmed to reduce the space heating set point and/or Hot Water Generator set point for each demand during a certain time each day. A start and stop time for each demand can be programmed for each day of the week. The controller can be programmed to reduce the tank set point as well. A different set of start and stop times can be programmed each day of the week.

Flame current support

To prevent nuisance shutdowns when the boiler is firing at minimum rates, the control will increase the firing rate when the flame signal drops too low.

ModBus

The Power-fin boiler can be connected to and controlled by a Building Automation System through the ModBus interface. Connect the A and B wires to the A and B terminals. If connecting another cable (in a daisy chain), connect the shield wire of the first cable to one of the shield terminals, and the shield wire of the second cable to the other shield terminal. If it is desired to ground the cable shield at the heater, connect the shield wire to one of the shield terminals, and install a jumper across the two (2) terminals in connector X5 on the ModBus interface board.

0-10V Rate output

A 0-10V signal which indicates the firing rate of the heater is available. This output may be connected to a Building Management System (BMS) to allow it to monitor the actual firing rate. Connect the - terminal to the COM or - terminal on the BMS, and connect the + terminal to the 0 - 10V or + terminal on the BMS.

Ramp Delay

For systems with lower flow, the SMART TOUCH can limit the firing rate (when enabled) when a space heating call for heat starts, or when switching from a DHW call for heat to a space heating call for heat. There are six (6) limits that can be programmed, as well as six (6) time intervals corresponding to each limit. The sixth limit will also limit the firing rate for the rest of the call for heat.

Protection features

Outlet temperature, flue temperature, and temperature rise limiting

The outlet water temperature is monitored by the boiler outlet temperature sensor. When the outlet temperature exceeds 215°F (102°C), the unit will reduce the fan speed. If the outlet water temperature exceeds 220°F (104.4°C) the control will shut the unit down until the minimum off time has expired and the outlet drops 10°F (5.5°C).

The control module monitors the flue temperature by a sensor located in the flue exhaust. If the flue temperature exceeds 400°F (204.4°C) the control will reduce the maximum fan speed. If the flue temperature exceeds 450°F (232.2°C) the control will shut the unit down. The unit will restart automatically once the flue temperature drops 50°F (10°C) and the minimum off time has expired.

The control monitors the temperature difference between the inlet and the outlet sensor. If this difference exceeds 55°F (12.8°C) the control will reduce the fan speed. If the temperature difference exceeds 65°F (18.3°C) the control will shut the unit down. The unit will restart automatically once the temperature difference has dropped below 50°F (10°C) and the minimum off time has expired.

Freeze protection

DO NOT install the boiler in a room likely to freeze.

The following integral feature of the SMART TOUCH control module provides some protection for the boiler only -- not for the system.

- The SMART TOUCH control module provides freeze-up protection as follows when the boiler water temperature drops below 45°F (7°C):
- Below 45°F (7°C), the boiler and system pumps (if enabled) operate constantly.
- Below 37°F (3°C), the boiler turns on.
- Boiler and pumps turn off if boiler water temperature rises above 43°F (6°C).

⚠ CAUTION This feature of the SMART TOUCH control module does not eliminate the possibility of freezing. The installation must still use recognized design, installation and maintenance practice to prevent freeze potential for the boiler and system.

10 Operating information

Monitor external limits

Connections are provided on the connection board for external limits such as an additional high limit. The SMART TOUCH control will shut off the burner and inhibit relighting whenever any of these external limits open.

Run-time and alarm outputs

The boiler provides dry contacts for indicating when the boiler is running, and when it is unable to operate.

Run-time and cycle counting

The control uses four timers to monitor the total hours of burner operation:

75 - 100%	50 - 75%
25 - 50%	<25%

The control uses four (4) ignition counters to monitor the amount of boiler cycles. The first counter counts all ignitions of the control. The second counter counts only ignition attempts that have failed. The third and fourth counters are the same as the first and second respectively, but can be reset by the installer.

Service reminder

The control can be programmed for service reminder notification. This notification will become active when either a set amount of time has expired, or a set amount of running hours or cycles has expired (all adjustable by the installer). The service reminder notification can be reset by the installer. The service company's name and phone number can be programmed to display when service is due.

Error logging

The control will hold in memory the last 10 blocking faults as well as the last 10 lockout faults. The date and time of the occurrence will be recorded as well. Only the 10 most recent occurrences will be held in memory.

Boiler temperature regulation

Operating temperature (target)

The SMART TOUCH control module senses water temperature and regulates boiler firing and firing rate to achieve a target temperature. The target temperature can be set between 32°F (0°C) and 215°F (101.7°C).

- Target temperature is fixed when the outdoor sensor is not installed.
- Target temperature is calculated as described under "Outdoor Reset Operation" and "Target Temperature Boost" when the outdoor sensor is connected.

High limit operations

The Power-fin SMART TOUCH control has two (2) integral limits, one auto reset and one manual reset. The Power-fin also has one auxiliary manual reset high limit. The integral and auxiliary high limits are UL353 certified.

When the outlet temperature exceeds 225°F (107.2°C) (Installer Adjustable Parameter), integral auto reset high limit action occurs. The boiler will shut down until the outlet water cools down and the timer expires.

If the outlet temperature exceeds 230°F (110°C) (User Adjustable Dial), auxiliary manual reset high limit action occurs. The boiler will shut down until the outlet water cools down and the boiler is reset through the user interface.

If the outlet temperature exceeds 230°F (110°C) (Installer Adjustable Parameter), integral manual reset high limit action occurs. The boiler will shut down until the outlet water cools down and the boiler is reset through the user interface.

Low water cutoff protection

A low water cutoff device with test and reset functionality is provided in the boiler as standard equipment.

Flow sensing device

The SMART TOUCH control module uses temperature sensing of both supply and return temperatures of the heat exchanger. If the flow rate is too low or the outlet temperatures too high, the control module modulates down and will shut the boiler off. This ensures boiler shutdown in the event of low flow conditions.

NOTICE If a mechanical flow switch is required to meet local code requirements the Power-fin boiler can be equipped with a field supplied outlet flow switch. Please wire to the Louver Proving Switch terminals.

Outdoor reset operation, if used

Target temperature with outdoor reset

This feature improves the system's efficiency as the outdoor temperature warms up.

See the Power-fin Service Manual to change the settings.

Reset curve

The reset curve looks at outdoor air temperature and adjusts the set point.

10 Operating information *(continued)*

Cascade

When multiple boilers are installed, they can be wired together in a cascade sequence. A maximum of eight boilers can be controlled from a single control. In this application one boiler would be designated as the Leader control and all others would be designated as Member controls.

Once the Leader boiler receives a call for heat from the Enable input, the 0 - 10 VDC input, or ModBus, the control will determine what the set point will be. If outdoor air reset is desired, connect the outdoor air sensor to the terminals on the Low Voltage Connection Board on the Leader boiler. The set point will be calculated based on the programmed reset curve parameters. See the Power-fin Service Manual to program the reset curve. If outdoor air reset is not desired, do not connect the outdoor air sensor. A fixed temperature set point can be programmed into the control, or provided through the ModBus interface.

If the water temperature at the controlling sensor is less than the set point + the turn-off offset - the off-on differential, the control will initiate a call for heat on the Cascade (see the Power-fin Service Manual for an explanation of the offset and differential). The Leader will energize the lead boiler on the Cascade. For a new start-up this will be the Leader boiler.

The two (2) types of Cascade control are listed below:

Efficiency optimization

Efficiency optimization is chosen when the application is such that overall heating efficiency is most important. The Cascade will fire the boilers in a way that is the most efficient. This allows more boilers to fire at one time, at a lower rate, thus more efficient.

Lead/Lag

The Lead/Lag method is chosen when the application requires firing as few boilers at a time as possible. This method will not bring on another boiler until the current number of boilers cannot meet the demand.

The parameters for both types of Cascade are adjustable. Reference the Power-fin Service Manual for a more detailed description of these adjustments.

Sequence of the cascade

To equalize the run time of all boilers on the Cascade, the firing sequence will automatically be changed at set intervals.

For the first 24 hours after initializing the Cascade, the sequence will be changed every hour. After that the sequence will be changed once every 24 hours.

HW operation with cascade

For normal mode HW operation any boiler(s) in the Cascade can be selected to provide heat for a HW call. Select a boiler to be designated as the HW boiler. Connect the HW thermostat or sensor to the terminals on the Low Voltage Connection Board marked for the corresponding device. When the boiler receives a HW call, the Leader control will take that boiler out of the Cascade sequence. If another boiler is available, the Leader will start it up to take its place.

The HW boiler will adjust its set point to the programmed HW boiler set point and will adjust its firing rate to maintain this. Once the HW call has been satisfied, the Leader control will place that boiler back into the Cascade sequence.

Switching of the boiler between HW operation and SH operation when there is a call for both does not occur in Cascade Mode.

When HW is programmed for Zone Mode, connect the HW thermostat or tank sensor to the Leader boiler. When a HW call is received, the Leader will modulate the entire Cascade to bring the system supply temperature up to the HW boiler set point (if higher).

Night Setback and Ramp Delay operations with cascade

Night Setback and Ramp Delay operation of the boilers within the Cascade are available. Programming will be done through the Leader boiler. Refer to the Power-fin Service Manual for information regarding Night Setback and Ramp Delay.

10 Operating information

Sequence of operation

1.	Upon a call for heat, the control turns on the appropriate pumps (system and boiler pumps for a space heating call, HW pump for a hot water generator call).
2.	The control confirms that the low water cutoff contacts are closed and energizes the louvers (optional).
3.	The control confirms that the gas pressure switch, blocked drain switch, limits, louver proving switch (optional) and contacts close. The Pre-Purge cycle begins.
4.	The control confirms the blower comes up to the desired speed, and the air pressure switch is closed.
5.	Once the Pre-Purge cycle is complete, the control lowers the blower speeds, initiates sparking of the ignition electrode, and opens the gas valve.
6.	After a short wait, the control stops sparking and checks for the presence of flame current through the flame sense electrode.
7.	If the control does not detect flame current, the control will lockout indefinitely, until the RESET button on the touch screen LCD is pressed.
8.	If the control detects flame current, the control will hold the blower speed constant for a few seconds to allow the flame to stabilize, then begin modulating the firing rate in order to maintain the controlling sensor to the desired set point temperature.
9.	If the current call for heat is for space heating and a HW call for heat becomes active, the control will turn on the HW pump relay output, then turn off the boiler pump. It will then modulate the blower speed in order to maintain the outlet temperature to the desired HW outlet set point temperature.
10.	Once both the space heating and HW calls for heat are satisfied, the control will turn off the gas valve(s) and begin the Post-Purge cycle. Any pumps that are running will begin their respective Pump Delay cycles.
11.	At the end of the Post-Purge cycle, the louver relay contacts will de-energize.
12.	At the end of the Pump Delay cycle(s), the pump(s) will be turned off.

10 Operating information *(continued)*

SMART TOUCH™ w/Power-fin CON•X•US Interface

The Home Screen displays the available basic system information. It is divided into the following sections: Status, Demand, Modulation, Sensors, and Navigation.

Figure 10-1 *Home Screen*

- The **Status** Section is located on the top left of the screen and displays how the unit is currently running (i.e. Off, Stand-by, Blocking, and Lockout) including: current driving demand, the next Hot Water Setback scheduled, the reason for any blocking or lockout, and a power button.

- The **Demand** Section is located on the bottom left of the screen and displays information about the targets and limits of the current demand being serviced.

- The **Modulation** Section is located on the top right of the screen and displays the target modulation of the unit. This section also includes target and actual fan speeds.

- The **Sensor** Section is located on the bottom right of the screen and displays both factory installed and field installed sensor including: Outdoor Air, Hot Water Temperature, System Supply, System Return, Inlet Water, Delta T, Outlet Water, Flue Temperature, and Flame Current.

- The **Navigation** Section is located down the left side of the screen. There are five (5) sections located below the Lochinvar icon: Home, View, Setup, Information (About), and Settings. The Home Section is the screen shown above. The View Section provides more detailed information including subsections for: History, Cascade, Graphing, and a complete list of current Sensor Values. The Setup Section has several screens to aid in setting up the appliance. The Setup Section includes screens for adjusting: Set Points, Pump Settings, Cascade, BMS, Ramp Delay, and Night Setback. The Information Section provides information about the hardware and software including the current software version of the interface, the version of the boiler control, and the CON·X·US device serial number. The Setting Section enables several interface setup features including: Time Setup, Temperature Unit Select, Loch'n Link, System Update, and WiFi Setup.

11 Maintenance

Maintenance and annual start-up

***Table 11A**_Service and Maintenance Schedules*

Service technician (see the following pages for instructions)	
ANNUAL START-UP	**General:** • Address reported problems, if any • Inspect interior; clean and vacuum if necessary; • Clean condensate trap and fill with fresh water • Check for leaks (water, gas, flue, condensate) • Verify flue and air lines in good condition and sealed tight • Check system water pressure/system piping/expansion tank • Check fill water meter • Test boiler water. When test indicates, clean system water with approved system restorer following manufacturer's information. • Check control settings • Check the ignition and both flame sense electrodes (sand off any deposits; clean and reposition) • Check wiring and connections • Perform start-up checkout and performance verification per Section 9. • Flame inspection (stable, uniform) • Check both flame signals (at least 10 microamps at high fire) • Clean the heat exchanger • Test low water cutoff (reference the Power-fin Service Manual). **If combustion or performance indicate need:** • Clean heat exchanger • Remove and clean burner using compressed air only • Clean the blower wheels

Owner maintenance (see the Power-fin User's Information Manual for instructions)	
Daily	• Check boiler area • Check pressure/temperature gauge
Monthly	• Check vent piping • Check air piping • Check air and vent termination screens • Check relief valve • Check condensate drain system
Every 6 months	• Test low water cutoff • Reset button (low water cutoff) • Check boiler piping (gas and water) for leaks • Operate relief valve
End of season months	• Shut boiler down (unless boiler used for domestic hot water)

11 Maintenance *(continued)*

⚠WARNING Follow the service and maintenance procedures given throughout this manual and in component literature shipped with the boiler. Failure to perform the service and maintenance could result in damage to the boiler or system. Failure to follow the directions in this manual and component literature could result in severe personal injury, death, or substantial property damage.

⚠WARNING The boiler should be inspected annually only by a qualified service technician. In addition, the maintenance and care of the boiler designated in Table 11A and explained on the following pages must be performed to assure maximum boiler efficiency and reliability. Failure to service and maintain the boiler and system could result in equipment failure.

⚠WARNING Electrical shock hazard – Turn off power to the boiler before any service operation on the boiler except as noted otherwise in this instruction manual. Failure to turn off electrical power could result in electrical shock, causing severe personal injury or death.

Address reported problems

1. Inspect any problems reported by the owner and correct before proceeding.

Inspect boiler area

1. Verify that boiler area is free of any combustible materials, gasoline and other flammable vapors and liquids.
2. Verify that air intake area is free of any of the contaminants listed in Section 1 of this manual. If any of these are present in the boiler intake air vicinity, they must be removed. If they cannot be removed, reinstall the air and vent lines per this manual.

Inspect boiler interior

1. Remove the front access covers and inspect the interior of the boiler.
2. Vacuum any sediment from inside the boiler and components. Remove any obstructions.

Clean condensate trap

1. Inspect the condensate drain line, vent line, condensate PVC fittings, and condensate trap.

Flush condensate trap with water

1. Remove the four (4) screws securing the top cover to the condensate trap and remove the cover (FIG. 11-1).
2. Locate the plastic ball inside the float tube. Verify there is nothing under the ball causing it to not seat properly.
3. Replace the top cover and the screws removed in Step 1.

Figure 11-1 *Condensate Trap*

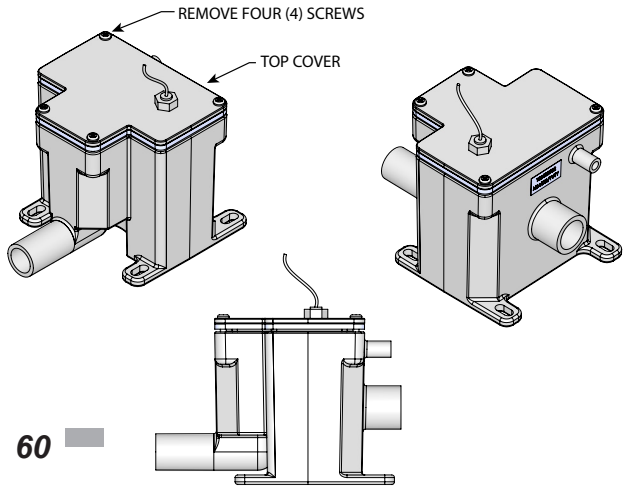

Check all piping for leaks

⚠WARNING Eliminate all system or boiler leaks. Continual fresh makeup water will reduce boiler life. Minerals can build up, reducing heat transfer, overheating heat exchanger, and causing heat exchanger failure. Leaking water may also cause severe property damage.

1. Inspect all water and gas piping and verify to be leak free.
2. Look for signs of leaking lines and correct any problems found.
3. Check gas line using the procedure found in Section 6 - *Gas Connections*.

Flue vent system and air piping

1. Visually inspect the entire flue gas venting system and air piping for blockage, deterioration or leakage. Repair any joints that show signs of leakage. Verify that air inlet pipe is connected and properly sealed.
2. Verify that boiler vent discharge and air intake are clean and free of obstructions.

⚠WARNING Failure to inspect for the above conditions and have them repaired can result in severe personal injury or death.

Check water system

1. Verify all system components are correctly installed and operational.
2. Check the cold fill pressure for the system. Verify it is correct (must be a minimum of 12 PSI (82.7 kPa)).
3. Watch the system pressure as the boiler heats up (during testing) to ensure pressure does not rise too high. Excessive pressure rise indicates expansion tank sizing or performance problem.
4. Inspect automatic air vents and air separators. Remove air vent caps and briefly press push valve to flush vent. Replace caps. Make sure vents do not leak. Replace any leaking vents.

2000622601 00

11 Maintenance

Check expansion tank

1. Expansion tanks provide space for water to move in and out as the heating system water expands due to temperature increase or contracts as the water cools. Tanks may be open, closed or diaphragm or bladder type. See Section 5 - *Hydronic Piping* for suggested best location of expansion tanks and air eliminators.

Check fill water meter

1. Check fill water meter for water usage. If the amount exceeds 5% of your system volume, you could have a leak. Have the system checked for leaks and fixed by a qualified service technician.

Test boiler water

1. Test boiler water. Reference the Power-Fin Installation and Operation Manual for guidelines. When test indicates, clean system water with approved system restorer following the manufacturer's information.

Check boiler relief valve

1. Inspect the relief valve and lift the lever to verify flow. Before operating any relief valve, ensure that it is piped with its discharge in a safe area to avoid severe scald potential. Read Section 5 - *Hydronic Piping* before proceeding further.

⚠WARNING Safety relief valves should be re-inspected AT LEAST ONCE EVERY THREE YEARS, by a licensed plumbing contractor or authorized inspection agency, to ensure that the product has not been affected by corrosive water conditions and to ensure that the valve and discharge line have not been altered or tampered with illegally. Certain naturally occurring conditions may corrode the valve or its components over time, rendering the valve inoperative. Such conditions are not detectable unless the valve and its components are physically removed and inspected. This inspection must only be conducted by a plumbing contractor or authorized inspection agency – not by the owner. Failure to re-inspect the boiler relief valve as directed could result in unsafe pressure build-up, which can result in severe personal injury, death, or substantial property damage.

⚠WARNING Following installation, the valve lever must be operated AT LEAST ONCE A YEAR to ensure that waterways are clear. Certain naturally occurring mineral deposits may adhere to the valve, rendering it inoperative. When manually operating the lever, water will discharge and precautions must be taken to avoid contact with hot water and to avoid water damage. Before operating lever, check to see that a discharge line is connected to this valve directing the flow of hot water from the valve to a proper place of disposal. Otherwise severe personal injury may result. If no water flows, valve is inoperative. Shut down the boiler until a new relief valve has been installed.

2. After following the above warning directions, if the relief valve weeps or will not seat properly, replace the relief valve. Ensure that the reason for relief valve weeping is the valve and not over-pressurization of the system due to expansion tank waterlogging or undersizing.

Inspect ignition and flame sense electrode

1. Remove the ignition and flame sense electrode from the burner plate.
2. Remove any deposits accumulated on the ignition/flame sense electrode using sandpaper. If the electrode cannot be cleaned satisfactorily, replace with a new one.
3. Replace ignition/flame sense electrode, making sure the gasket(s) is in good condition and correctly positioned.

Check ignition ground wiring

1. Inspect boiler ground wire from the heat exchanger access cover to ground terminal strip.
2. Verify all wiring is in good condition and securely attached.
3. Check ground continuity of wiring using continuity meter.
4. Replace ground wires if ground continuity is not satisfactory.

Check all boiler wiring

1. Inspect all boiler wiring, making sure wires are in good condition and securely attached.

Check control settings

1. Navigate to the Setup Screen and check all settings. See Section 1 of the Power-fin Service Manual. Adjust settings if necessary. See Section 1 of the Power-fin Service Manual for adjustment procedures.
2. Check settings of external limit controls (if any) and adjust if necessary.

11 Maintenance *(continued)*

Perform start-up and checks

1. Start boiler and perform checks and tests specified in Section 9 - *Start-up*.
2. Verify cold fill pressure is correct and that operating pressure does not go too high.

Check all wiring

1. Inspect all wiring, making sure wires are in good condition and securely attached.

Check control settings

1. Set the SMART TOUCH control module display to Parameter Mode and check all settings. See *Section 1* of the Power-fin Service Manual. Adjust settings if necessary. See *Section 1* of the Power-fin Service Manual for adjustment procedures.
2. Check settings of external limit controls (if any) and adjust if necessary.

Perform start-up and checks

1. Start appliance and perform checks and tests specified in *Section 9 - Start-up*.
2. Verify cold fill pressure is correct and that operating pressure does not go too high.

Check burner flame

Visually check main burner flames at each start-up after long shutdown periods or at least every six months. A burner viewport is located on the burner mounting flange.

⚠WARNING The area around the burner viewport is hot and direct contact could result in burns.

Figure 11-2_Flame Pattern Illustration

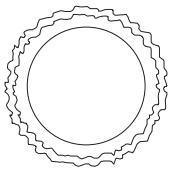

NORMAL BURNER FLAME

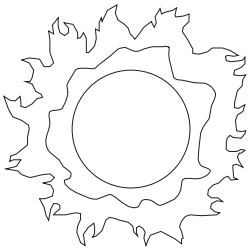

ABNORMAL BURNER FLAME

Normal Flame: A normal flame at 100% of burner input is blue, with slight yellow tips, a well defined flame and no flame lifting.

Yellow Tip: Yellow tipping can be caused by blockage or partial obstruction of air flow to the burner.

Yellow Flames: Yellow flames can be caused by blockage of primary air flow to the burner or excessive gas input. This condition MUST be corrected immediately.

Lifting Flames: Lifting flames can be caused by over firing the burner, excessive primary air or high draft.

If improper flame is observed, examine the venting system, ensure proper gas supply and adequate supply of combustion and ventilation air.

Check flue gas passageways

Any sign of soot around the inner jacket, outer jacket, flue pipe connections, burner or in the areas between the fins on the copper heat exchanger indicates a need for cleaning. The following cleaning procedure must only be performed by a qualified serviceman or installer. Proper service is required to maintain safe operation. Properly installed and adjusted units seldom need flue cleaning.

NOTICE All gaskets/sealants on disassembled components or jacket panels must be replaced with new gaskets/sealants on reassembly. Gasket and sealant kits are available from your distributor.

⚠ CAUTION When a Category IV vent system is disconnected for any reason, the flue must be reassembled and resealed according to the vent manufacturer's instructions.

11 Maintenance

Inspect and clean burner

The burner should be removed for inspection and cleaned on an annual basis. An appliance installed in a dust or dirt contaminated environment may require cleaning of the burner on a 3 to 6 month schedule or more often, based on severity of the contamination. The fan assisted combustion process may force airborne dust and dirt contaminants, contained in the combustion air, into the burner. With sustained operation, non-combustible contaminants may reduce burner port area, reduce burner input or cause non-warrantable damage to the burner.

Use extreme care when operating an appliance for temporary heat during new construction. Airborne contaminants such as dust, dirt, concrete dust or drywall dust can be drawn into the burner with the combustion air and block the burner port area. External combustion air filters are provided with the appliance. These filters help ensure clean air is used for the combustion process. Check filters every month and replace when necessary. The burner of an appliance used for temporary heat without combustion air filters installed will probably require a thorough cleaning before the unit is placed into normal service.

Access to the burner will require the following steps:

1. Turn off main electrical power to the appliance.
2. Turn off main manual gas shutoff to the appliance.
3. Remove the front outer control panel cover. Slide out the inner control panel to increase service clearances and carefully remove the multi-pin wiring connectors on the back of the control panel. Remove the screws along the top edge of the top outer jacket panel to remove top. Remove the control panel to allow access to the components in the top of the appliance.
4. Disconnect the wiring connections on the top of the combustion air blower.

For Models 2500 and 3000 only:

a. Remove the four (4) nuts securing the air/gas venturi to the air box assembly.
b. Remove the four (4) bolts and nuts from the gas inlet flange to the side of the air/gas venturi. Carefully handle the cork gasket and set aside for re-use if not damaged.
c. Remove the four (4) screws securing the blower to the blower transition.
d. Carefully remove the combustion blower and air/gas venturi assembly.
e. Disconnect the flame sensor and spark ignitor wires.
f. On Models 3000 only, remove the sensing tube from the air pressure switch to the blower transition.
g. Remove the eight (8) nuts securing the blower transition to the top of the heat exchanger assembly.
h. Remove the blower transition.

For Models 3500 and 5000 only:

a. Remove the air box top cover.
b. Remove the nuts holding the combustion air blower to the whirlwind.
c. Remove the four (4) screws securing the blower to the blower transition.
d. Use care when removing the combustion air blower to prevent damage to the gaskets.

For the 4000 Model only:

a. Remove the four (4) bolts from the outlet flange of the gas valve to disconnect the section of the gas train to the air box.
b. Remove the screws and locknuts from the air box front section as shown in FIG. 11-3.
c. Remove the sheet metal front portion of the air box with the gas train section by lifting upward.

5. Disconnect the flame sensor and spark ignitor wires.
   a. Remove the sensing tube from the air pressure switch to the blower transition.
   b. Remove the eight (8) nuts securing the blower transition to the heat exchanger assembly top.
   c. Remove the blower transition.
6. The burner can now be lifted vertically out of the heat exchanger chamber.
7. Use care when removing the burner to prevent damage to the woven burner port surface or gaskets on removal.
8. Remove any visible dust or dirt blockage from the surface of the burner with a vacuum. Compressed air may also be blown across the burner surface to clean the "pores" of the woven burner port material.
9. Reassemble in reverse order.

***Figure 11-3**_Air Box Assembly_Model 4000 Only*

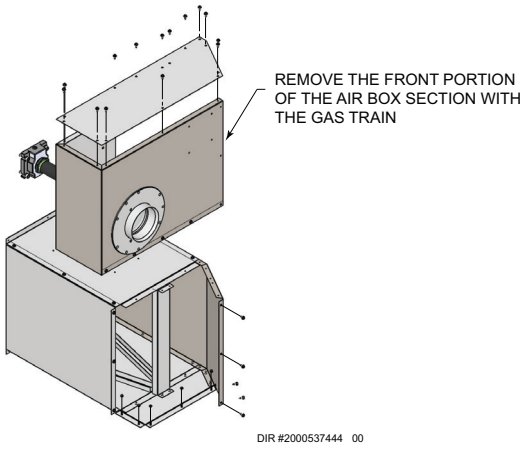

11 Maintenance *(continued)*

Inspect and clean the heat exchanger

1. Turn off all power to the appliance.
2. Turn off main gas to appliance.
3. Remove the front outer jacket panel.
4. Remove the front inner jacket panel (see FIG. 11-4).
5. Check the heat exchanger surface for soot. If soot is present, the heat exchanger must be cleaned and the problem corrected.
6. Remove the burner as described in the *Inspect and Clean Burner* section of this manual.
7. Check the "V" baffles on the heat exchanger. Remove and clean if necessary.
8. Remove soot from the heat exchanger with a stiff bristle brush. Use a vacuum to remove loose soot from surfaces and inner chamber.
9. The heat exchanger can be removed by disconnecting all water piping to the heat exchanger, removing the screws holding the heat exchanger to the top of the inner jacket and sliding the heat exchanger towards the front of the appliance. Once the heat exchanger is removed, a garden hose can be used to wash the tubes to ensure that all soot is removed from the heat exchanger surfaces. *Note: Do not wet the insulation blankets on the inside of the outer jacket panels.*
10. Ensure that any soot present on the burner is removed. See *Inspect and Clean Burner* section, this page.
11. Carefully reinstall the heat exchanger and "V" baffles if removed from the appliance.
12. Reinstall the inner jacket panel, burner, manifolds, wires, and hoses. Use new gasket material to ensure a proper air seal.
13. Reassemble all gas and water piping. Test for gas leaks.

NOTICE Upon completion of any testing on the gas system, leak test all gas connections with a soap and water solution while main burners are operating. Do not spray soap and water solution on the SMART TOUCH control module housing. The use of an excessive amount of soap and water solution can damage the control. Immediately repair any leak found in the gas train or related components. Do not operate an appliance with a leak in the gas train, valves, or related piping.

14. Reassemble outer jacket panels.
15. Cycle unit and check for proper operation.

***Figure 11-4**_Location of the Heat Exchanger Inside Jacket*

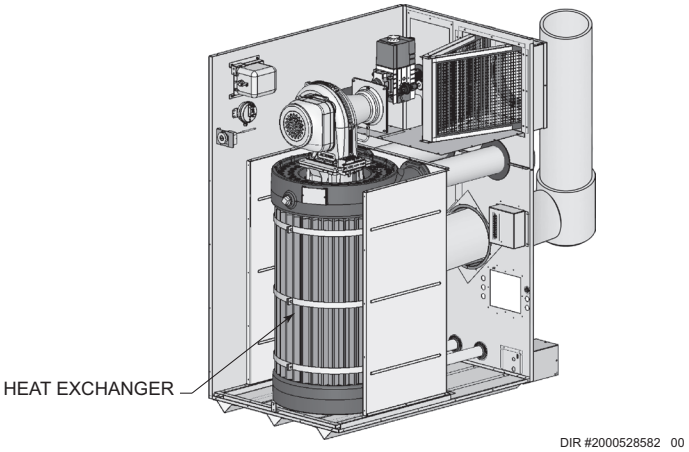

Review with owner

1. Review the Power-fin User's Information Manual with the owner.
2. Emphasize the need to perform the maintenance schedule specified in the Power-fin User's Information Manual (and in this manual as well).
3. Remind the owner of the need to call a licensed contractor should the appliance or system exhibit any unusual behavior.
4. Remind the owner to follow the proper shutdown procedure and to schedule an annual start-up at the beginning of the next heating season.

Oiled bearing circulators

Inspect the pump every six (6) months and oil as necessary. Use SAE 30 non-detergent oil or lubricant specified by the pump manufacturer.

12 Diagrams

Figure 12-1 *Wiring Diagram_2.5 & 3.0 Models*

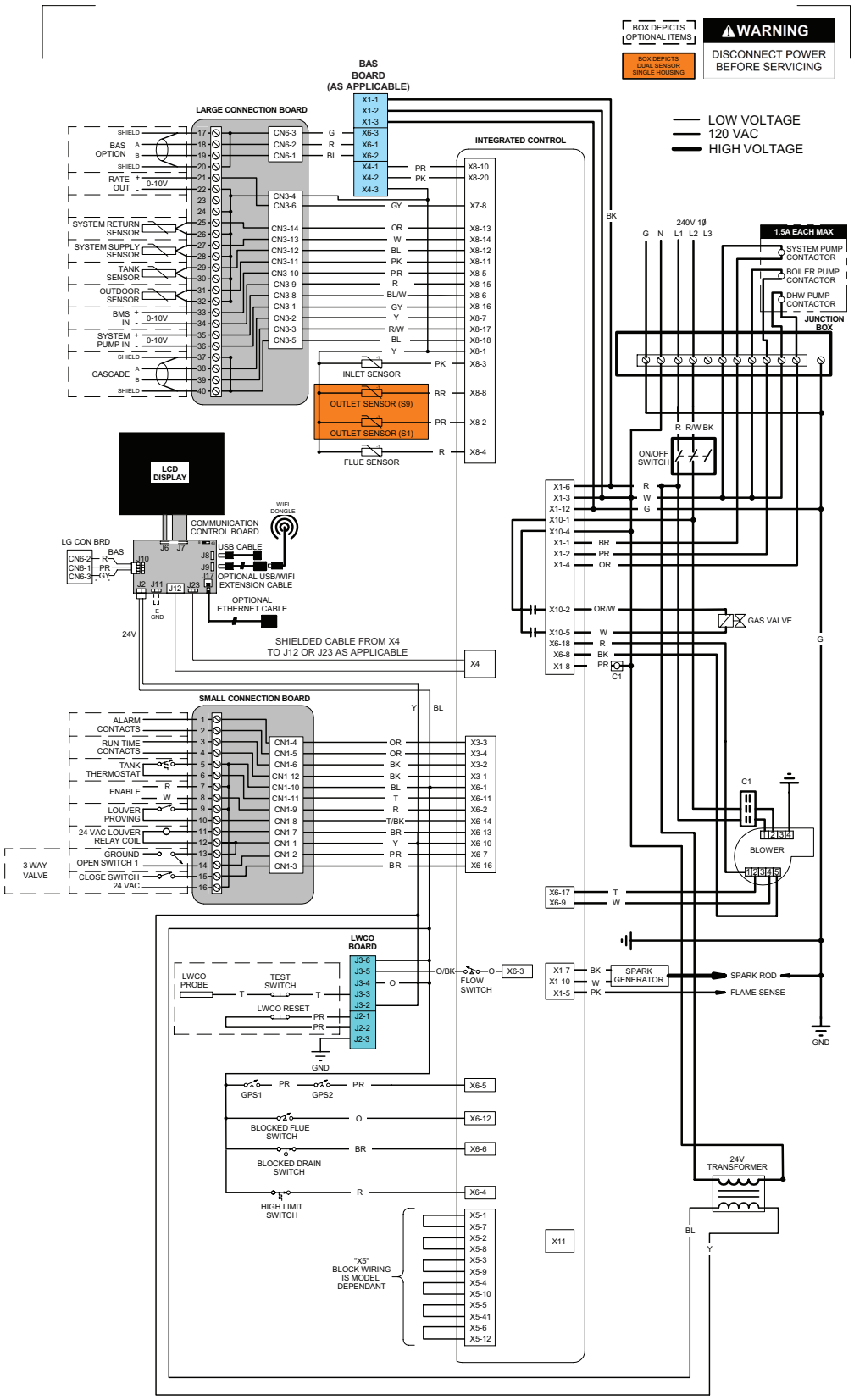

Notes:
1. All wiring must be installed in accordance with: local, state, provincial and national code requirements per either N.E.C. in USA or C.S.A. in Canada.
2. If any original equipment wire as supplied with the appliance must be replaced, it must be replaced with wire having same wire gauge (AWG) and rated for a minimum of 105°C. Exceptions: Replacement high vo llage spark lead and shielded cables must be purchased from the factory. Use of a non-approved spark lead or shielded cables can lead to operational problems which could result in non-repairable damage to the integrated controller or other components.
3. Actual conector block locations may vary from those shown on diagrams. Refer to actual components for proper connector block locations when using diagrams to troubleshoot unit.

WIRING DIAGRAM
100273958 REV C

12 Diagrams *(continued)*

Figure 12-2 *Wiring Diagram_3.5 & 4.0 Models*

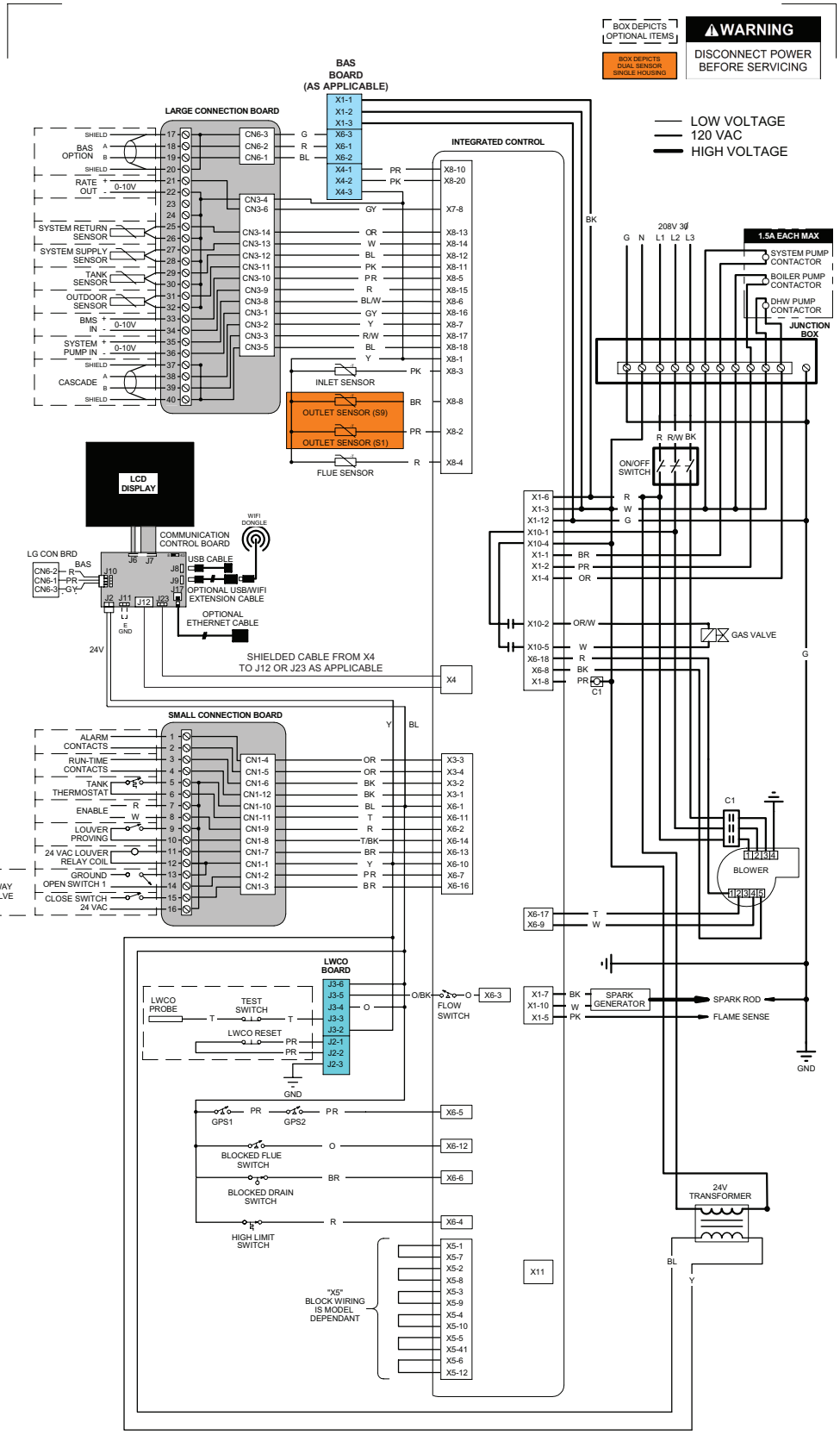

Notes:
1. All wiring must be installed in accordance with: local, state, provincial and national code requirements per either N.E.C. in USA or C.S.A. in Canada.
2. If any original equipment wire as supplied with the appliance must be replaced, it must be replaced with wire having same wire gauge (AWG) and rated for a minimum of 105°C. Exceptions: Replacement high vo ltage spark lead and shielded cables must be purchased from the factory. Use of a non-approved spark lead or shielded cables can lead to operational problems which could result in non-repairable damage to the integrated controller or other components.
3. Actual connector block locations may vary from those shown on diagrams. Refer to actual components for proper connector block locations when using diagrams to troubleshoot unit.

WIRING DIAGRAM 100273956 REV C

12 Diagrams

Figure 12-3 *Wiring Diagram_5.0 Model*

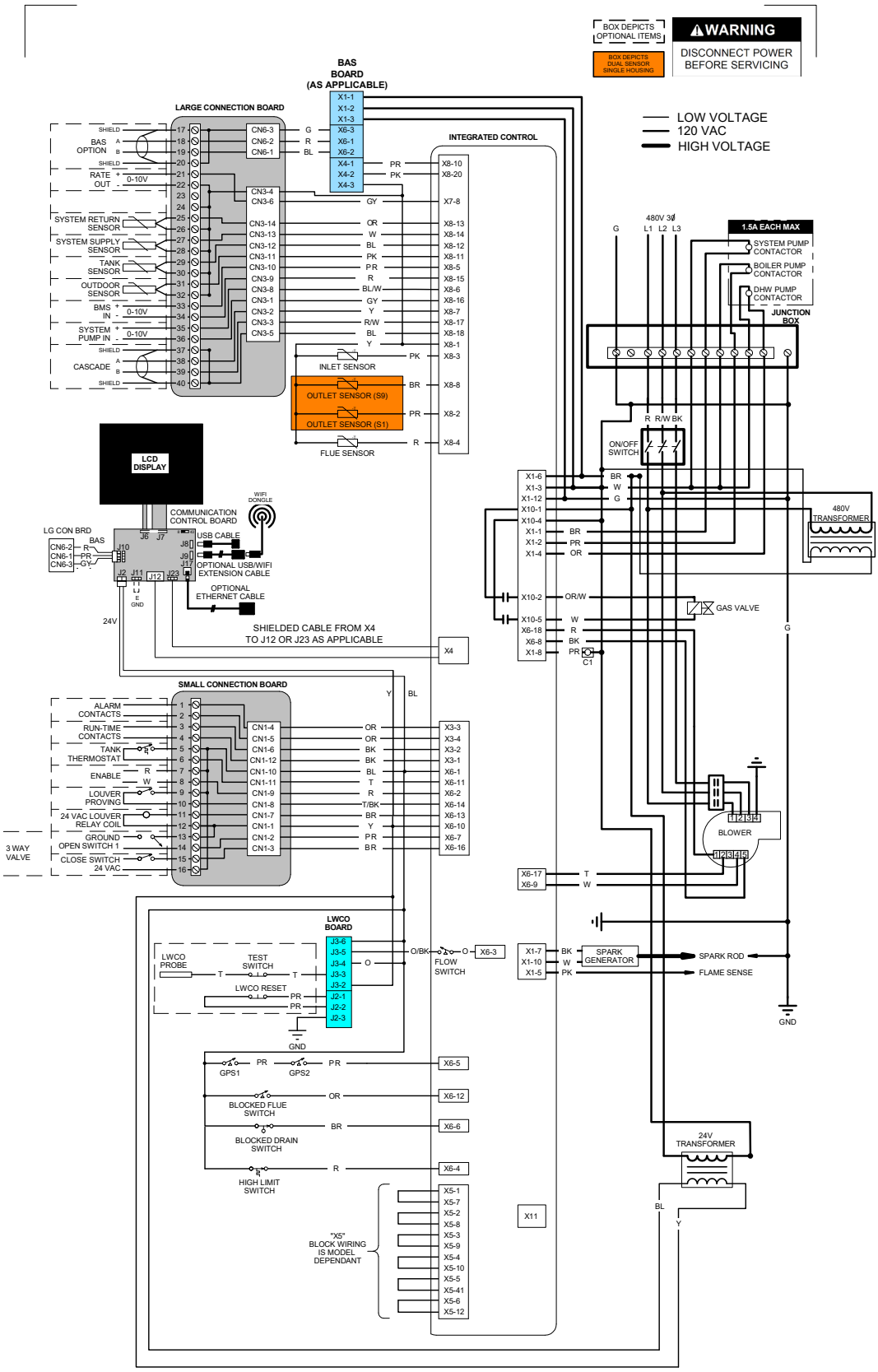

Notes:
1. All wiring must be installed in accordance with: local, state, provincial and national code requirements per either N.E.C. in USA or C.S.A. in Canada.
2. If any original equipment wire as supplied with the appliance must be replaced, it must be replaced with wire having same wire gauge (AWG) and rated for a minimum of 105°C. Exceptions: Replacement high vo ltage spark lead and shielded cables must be purchased from the factory. Use of a non-approved spark lead or shielded cables can lead to operational problems which could result in non-repairable damage to the integrated controller or other components.
3. Actual connector block locations may vary from those shown on diagrams. Refer to actual components for proper connector block locations when using diagrams to troubleshoot unit.

WIRING DIAGRAM 100340734 REV A

12 Diagram *(continued)*

Figure 12-4 *Ladder Diagram_2.5 & 3.0 Models*

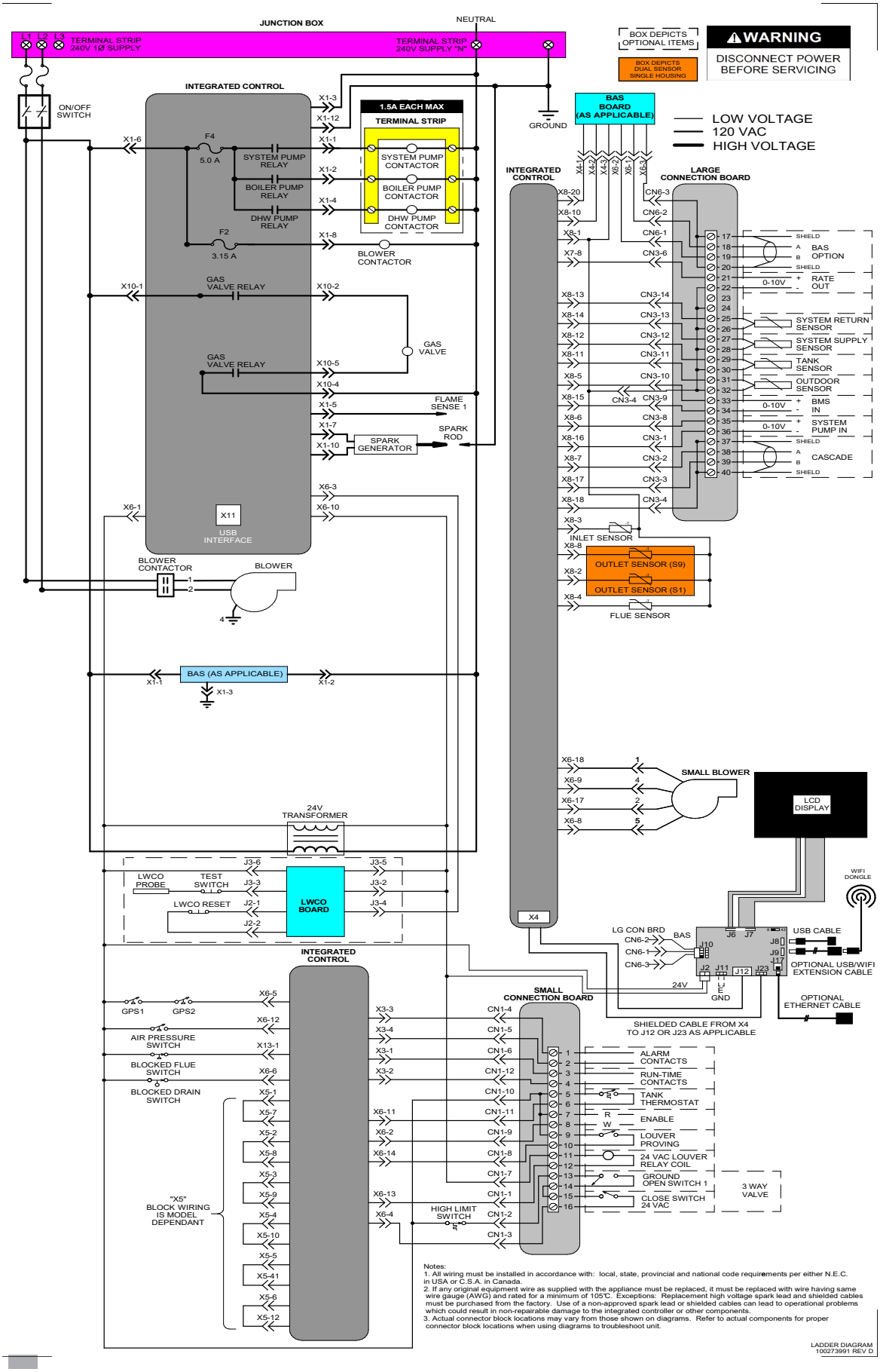

12 Diagram

***Figure 12-5** Ladder Diagram_3.5 & 4.0 Models*

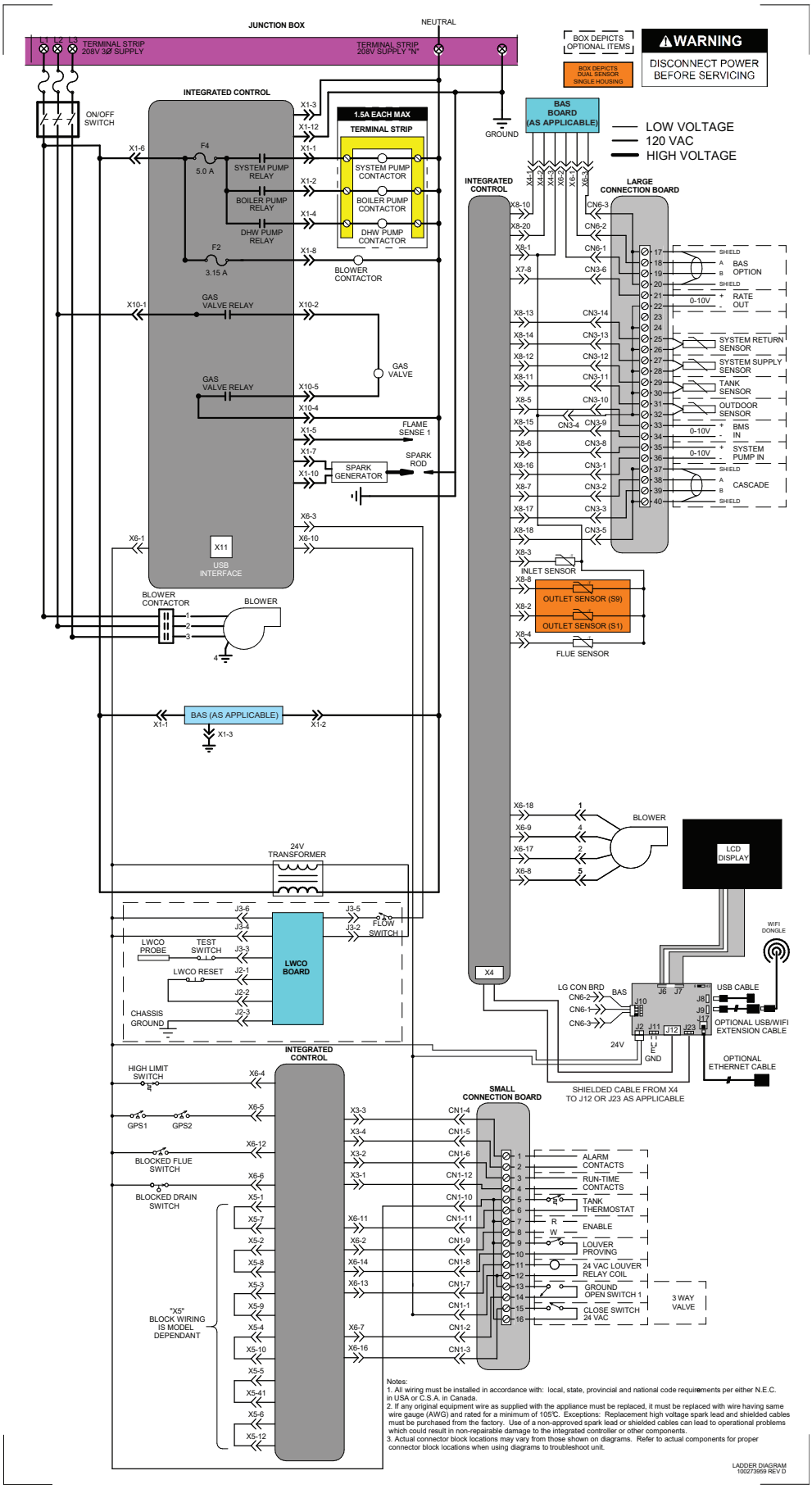

12 Diagram *(continued)*

Figure 12-6 *Ladder Diagram_5.0 Model*

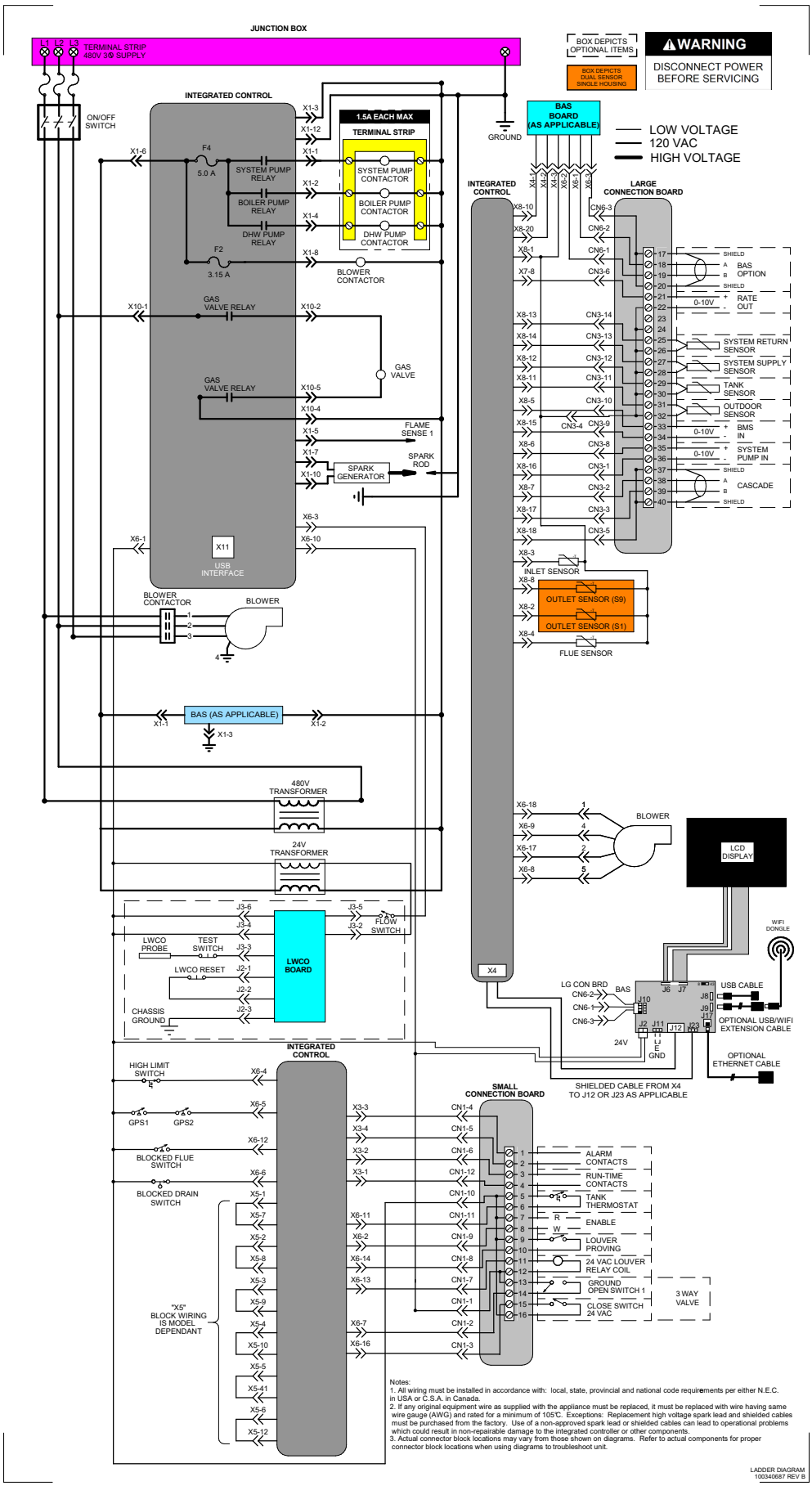

Notes

Notes

Notes

Revision Notes: *Revision A (Process #3000004033_Change #500004083) initial release.*

Revision B (Process #3000006244_Change #500006394) reflects edits made to the Inspect and Clean Burner Section.

Revision C (PCP# 3000005648 / CN# 500006460) reflects an update to Figures 3-3 and 3-4 on page 21 and Figure 4-4 on page 24.

Revision D (PCP# 3000009248 / CN# 500009030) reflects limit changes on pages 51-52 of the Operating Information section.

Revision E (PCP #3000021634 / CN #20001858) reflects an update to water chemistry information on pages 3, 7, 26-27, 28-34, 43-44, 57, and 59.

Revision F (PCP #3000022757 / CN #500012924) reflects an update to Table 2D on page 18 and Table 5B on page 34.

Revision G (PCP #3000024224 / CN #500014583) reflects an update to the piping diagrams.

Revision H (PCP #3000027372 / CN #500017084) reflects an update to FIG.'s 4-1 and 4-4.

Revision J (PCP #3000028200 / CN #500017830) reflects an update to the user interface display screens as well as updates to the ladder and wiring diagrams.

Revision K (PCP #3000030789 / CN #500020039) reflects an update to Table 2A-1.

Revision L (PCP #3000031557 / CN #500020650) reflects an update to Figure 7-4.

Revision M (PCP #3000033465 / CN #500022172) reflects the addition of the neutral wiring reference on page 38.

Revision N (PCP #3000034212 / CN #500022969) reflects an update to the ratings table, Figure 3-3, and Figure 3-4.

Revision P (PCP #3000034853 / CN #500023423) reflects an update to the maximum temperature set point on pages 38 and 53.

Revision R (PCP #3000036331 / CN #500024646) reflects an update from 7" to 8" pipe in the hydronic piping charts.

Revision T (PCP #3000041734 / CN #500029765) reflects an update to the "Wiring of the Cascade" section.

Revision U (PCP #3000043563 / CN #500031211) reflects an update to the wiring and ladder diagrams.

Revision V (PCP #3000052551 / CN #500039466) reflects an update to Table 2A-1 and Table 2A-2.

Revision W (PCP #3000054410 / CN #500041125) reflects the update of the warnings on page 7.

Revision X (PCP #3000055117 / CN #500041565) reflects an update to figures 8-1, 9-1, and 11-1.

Revision Y (PCP #3000055885 / CN #500042300) reflects an update to the ladder diagrams on pages 68-70.

Revision AB (PCP #3000074113 / CN #500059439) reflects the addition of a condensate drain clarification and updating references throughout.

100275648_2000534387_Rev AB
09/26 - Printed in U.S.A

Lochinvar®
HIGH EFFICIENCY BOILERS & WATER HEATERS
300 Maddox Simpson Parkway
Lebanon, TN 37090
615-889-8900 / Fax: 615-547-1000
www.Lochinvar.com